Pilot Operated 2 Port Solenoid Valve

VXD Series

Air | Water | Oil | Heated water (99°C) | High temperature oil (99°C)

CE RoHS

Compact
Height
Approx. 7% Smaller* (7 mm)
(VXD24)

Lightweight
Weight
20% Lighter* (90 g)
(VXD23 Resin body)

Options newly added!
Class H/24 VDC
Class H/DIN terminal
Seal material: EPDM

* Comparison with SMC current model

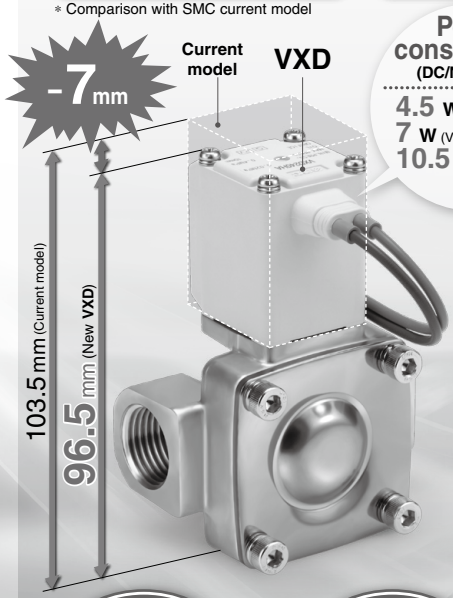

Power consumption
(DC/N.C. valve)
4.5 W (VXD23 to 25)
7 W (VXD26, 27)
10.5 W (VXD28, 29)

Air

Body material

Resin (VXD2$^{3}_{A}$) **Aluminum** (VXD2$^{3}_{A}$)

Air | Water | Oil | Heated water (99°C) | High temperature oil (99°C)

Body material

C37, Stainless steel, CAC408
(VXD2$^{3}_{A}$ to 2$^{8}_{G}$) (VXD2$^{3}_{E}$ to 2$^{8}_{G}$)

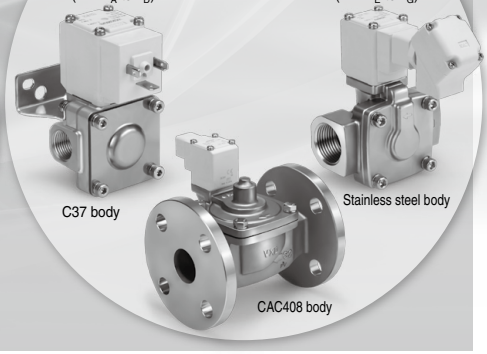

Solenoid coil type
Insulation type Class B/H

Valve type
N.C. N.O.

Enclosure IP65*
* Electrical entry flat terminal type terminal is IP40.

Enclosure IP65

Flame resistance UL94V-0 conformed

Flame resistant mold coil material

Low-noise construction

Metal noise reduced by the rubber bumper

Piping variations

Thread piping, One-touch fitting, Flange piping

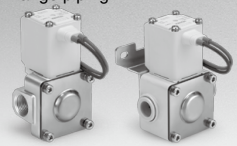

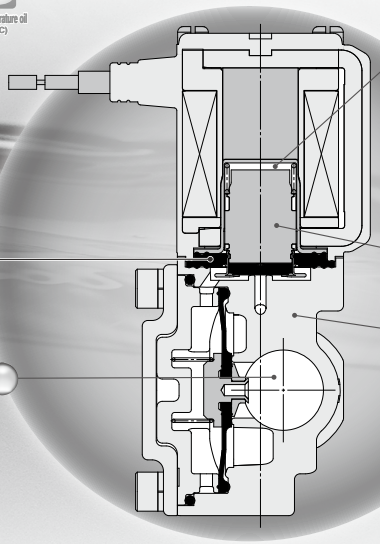

Clearance

By providing a bumper and clearance, we reduced the collision sound of the core when ON (when the valve is open). Because of the clearance, when using highly viscous fluids such as oil, the armature does not get stuck and the responsiveness when OFF (when the valve is closed) is improved.

Power consumption

4.5 W (VXD23 to 25)
7 W (VXD26 to 27)
10.5 W (VXD28 to 29)

Improved armature durability

Body material

Air

Aluminum (VXD2$^{3}_{A}$)
Resin (VXD2$^{3}_{A}$)
C37, Stainless steel (VXD2$^{4}_{B}$ to 2$^{6}_{D}$)
CAC408 (VXD2$^{7}_{E}$ to 2$^{9}_{G}$)

Water/Oil/Heated water/ High temperature oil

C37, Stainless steel (VXD2$^{3}_{A}$ to 2$^{6}_{D}$)
CAC408 (VXD2$^{7}_{E}$ to 2$^{9}_{G}$)

Built-in full-wave rectifier type
(AC specification: Insulation type Class B/H)

Improved durability
Service life is extended by the special construction. (compared with current shading coil)

Reduced buzz noise
Rectified to DC by the full-wave rectifier, resulting in a buzz noise reduction.

Reduced apparent power (Class B, N.C. valve)
10 VA → **7** VA (VXD23 to 25)
20 VA → **9.5** VA (VXD26 to 27)
32 VA → **12** VA (VXD28 to 29)

Improved OFF response
Specially constructed to improve the OFF response when operated with a higher viscosity fluid such as oil.

Low-noise construction
Specially constructed to reduce the metal noise during operation.

Model	Size	Orifice diameter	Body material	Port size										
				Thread					Flange			One-touch fitting		
				1/4	3/8	1/2	3/4	1	32A	40A	50A	ø10	ø3/8"	ø12
VXD2$^{3}_{A}$	8A 10A 15A	10 mmø	Aluminum	●	●	●	—	—	—	—	—	—	—	—
			Resin	—	—	—	—	—	—	—	—	●	●	●
			C37	●	●	●	—	—	—	—	—	—	—	—
			Stainless steel	●	●	●	—	—	—	—	—	—	—	—
VXD2$^{4}_{B}$	10A 15A	15 mmø	C37	—	●	●	—	—	—	—	—	—	—	—
			Stainless steel	—	●	●	—	—	—	—	—	—	—	—
VXD2$^{5}_{C}$	20A	20 mmø	C37	—	—	—	●	—	—	—	—	—	—	—
			Stainless steel	—	—	—	●	—	—	—	—	—	—	—
VXD2$^{6}_{D}$	25A	25 mmø	C37	—	—	—	—	●	—	—	—	—	—	—
			Stainless steel	—	—	—	—	●	—	—	—	—	—	—
VXD2$^{7}_{E}$	32A	35 mmø	CAC408	—	—	—	—	—	●	—	—	—	—	—
VXD2$^{8}_{F}$	40A	40 mmø		—	—	—	—	—	—	●	—	—	—	—
VXD2$^{9}_{G}$	50A	50 mmø		—	—	—	—	—	—	—	●	—	—	—

INDEX

Pilot Operated 2 Port Solenoid Valve
VXD Series

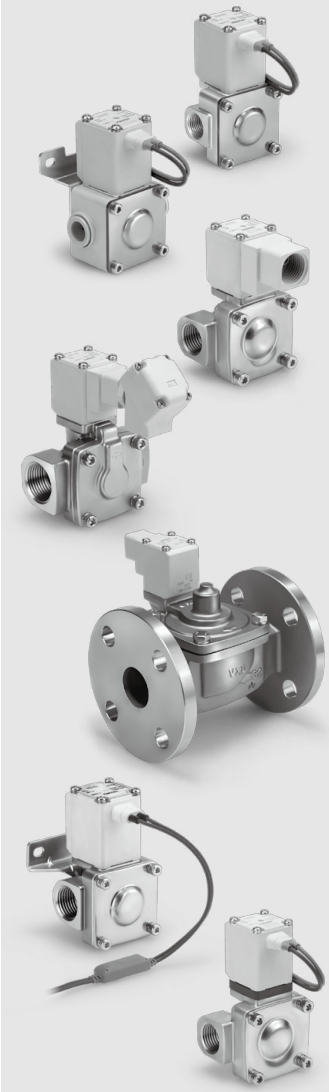

Common Specifications ..... P. 116
Selection Steps ..... P. 117

For Air
Model/Valve Specifications, Fluid and Ambient Temperature, Valve Leakage Rate ... P. 118, 119
How to Order ..... P. 120

For Water
Model/Valve Specifications, Fluid and Ambient Temperature, Valve Leakage Rate ... P. 121, 122
How to Order ..... P. 123

For Oil
Model/Valve Specifications, Fluid and Ambient Temperature, Valve Leakage Rate ... P. 124, 125
How to Order ..... P. 126

For Heated water
Model/Valve Specifications, Fluid and Ambient Temperature, Valve Leakage Rate ... P. 127, 128
How to Order ..... P. 129

For High temperature oil
Model/Valve Specifications, Fluid and Ambient Temperature, Valve Leakage Rate ... P. 130, 131
How to Order P.132

Other Special Options ..... P. 133
Construction ..... P. 136
Dimensions
For Air/Water/Oil
Body material: Resin ..... P. 138
Body material: Aluminum, C37, Stainless steel ... P. 140
Body material: C37, Stainless steel ..... P. 142
Body material: CAC408 ..... P. 146
For Heated water/High temperature oil
Body material: C37, Stainless steel ..... P. 148
Body material: CAC408 ..... P. 153
Replacement Parts ..... P. 155
Glossary of Terms ..... P. 156
Solenoid Valve Flow Rate Characteristics ..... P. 157
Flow Rate Characteristics ..... P. 162
Specific Product Precautions ..... P. 164

VXD Series
Common Specifications

Standard Specifications

Valve specifications	Valve construction		Pilot operated 2 port diaphragm type
	Withstand pressure		2.0 MPa (Resin body type 1.5 MPa)
	Body material		Aluminum, Resin, C37 (Brass), Stainless steel, CAC408 (Bronze casting)
	Seal material		NBR, FKM, EPDM Note 3)
	Enclosure		Dust-tight, Water-jet-proof type (IP65) Note 4)
	Environment		Location without corrosive or explosive gases
Coil specifications	Rated voltage	AC	100 VAC, 200 VAC, 110 VAC, 230 VAC, (220 VAC, 240 VAC, 48 VAC, 24 VAC) Note 2)
		DC	24 VDC, (12 VDC) Note 2)
	Allowable voltage fluctuation		±10% of rated voltage
	Allowable leakage voltage	AC	5% or less of rated voltage
		DC	2% or less of rated voltage
	Coil insulation type		Class B, Class H

Note 1) Electrical entry flat terminal type terminal is IP40.
Note 2) Voltage in ( ) indicates special voltage. (Refer to page 133.)
Note 3) For seal material/EPDM, refer to page 134.
Note 4) For enclosure, refer to "Glossary of Terms" on page 156. When using the product in a place which requires water resistance, please contact SMC.

⚠ **Be sure to read "Specific Product Precautions" before handling.**

Solenoid Coil Specifications

Normally Closed (N.C.)

DC Specification

Class B

Model	Power consumption (W) Note 1)	Temperature rise (°C) Note 2)
VXD23 to 25	4.5	50
VXD26, 27	7	55
VXD28, 29	10.5	65

Class H

Model	Power consumption (W) Note 1)	Temperature rise (°C) Note 2)
VXD23 to 25	9	100
VXD26, 27	12	100
VXD28, 29	15	100

Normally Open (N.O.)

DC Specification

Class B

Model	Power consumption (W) Note 1)	Temperature rise (°C) Note 2)
VXD2A to 2C	7.5	60
VXD2D, 2E	8.5	70
VXD2F, 2G	12.5	70

Class H

Model	Power consumption (W) Note 1)	Temperature rise (°C) Note 2)
VXD2A to 2C	9	100
VXD2D, 2E	12	100
VXD2F, 2G	15	100

Note 1) Power consumption: The value at ambient temperature of 20°C and when the rated voltage is applied. (Variation: ±10%)
Note 2) The value at ambient temperature of 20°C and when the rated voltage is applied. The value depends on the ambient environment.
This is for reference.

AC Specification (Built-in Full-wave Rectifier Type)

Class B

Model	Apparent power (VA) Note 1) 2)	Temperature rise (°C) Note 3)
VXD23 to 25	7	60
VXD26, 27	9.5	70
VXD28, 29	12	70

Class H

Model	Apparent power (VA) Note 1) 2)	Temperature rise (°C) Note 3)
VXD23 to 25	9	100
VXD26, 27	12	100
VXD28, 29	15	100

AC Specification (Built-in Full-wave Rectifier Type)

Class B

Model	Apparent power (VA)	Temperature rise (°C)
VXD2A to 2C	9	60
VXD2D, 2E	10	70
VXD2F, 2G	14	70

Class H

Model	Apparent power (VA) Note 1) 2)	Temperature rise (°C) Note 3)
VXD2A to 2C	9	100
VXD2D, 2E	12	100
VXD2F, 2G	15	100

Note 1) Apparent power: The value at ambient temperature of 20°C and when the rated voltage is applied. (Variation: ±10%)
Note 2) There is no difference in the frequency and the inrush and energized apparent power, since a rectifying circuit is used in the AC.
Note 3) The value at ambient temperature of 20°C and when the rated voltage is applied. The value depends on the ambient environment.
This is for reference.

Selection Steps

Selection Steps

Step 1 **Select the fluid.**

Item	Selection item	Page	Symbol	
Select the fluid.	Air	Page 118	0	❶
	Water	Page 121	2	
	Oil	Page 124	3	
	Heated water	Page 127	5	
	High temperature oil	Page 130	6	

VXD2 3 0 A A ❶

Step 2 **Select "Body material", "Port size" and "Orifice diameter" from "Flow rate — Pressure" of each fluid.**

Item	Selection item		Symbol	
Select from "Flow rate — Pressure." • Body material • Port size • Orifice diameter	Size	8A	3	❷
	Valve type	N.C.		
	Body material	Aluminum	A	❸
	Port size	1/4		
	Orifice diameter	10		

VXD2 3 0 A A ❷ ❸

Step 3 **Select electrical specification.**

Item	Selection item		Symbol	
Select electrical specification.	Voltage	24 VDC	A	❹
	Electrical entry	Grommet		

VXD2 3 0 A A ❹

Step 4 **For other special options, refer to page 133.**

For Air

Model/Valve Specifications

N.C.

Symbol

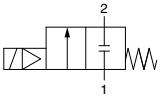

Refer to “Glossary of Terms” on page 156 for symbol.

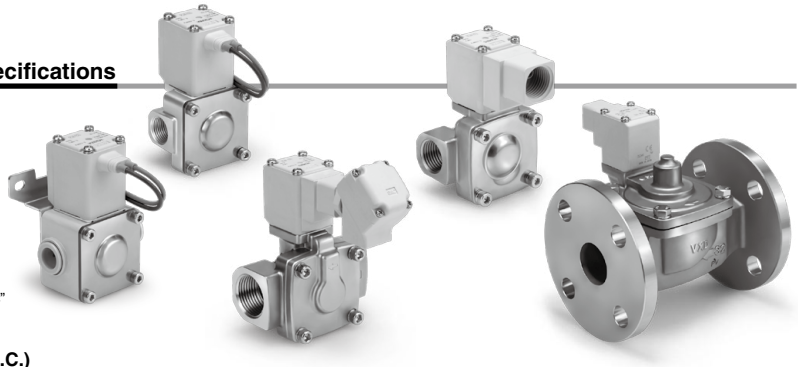

Normally Closed (N.C.)

Body material	Port size	Orifice diameter (mmø)	Model	Min. operating pressure differential Note 1, 3) (MPa)	Max. operating pressure differential Note 3)		Flow rate characteristics				Max. system pressure Note 3) (MPa)	Weight Note 2) (g)
					AC	DC	C	b	Cv	Effective area (mm²)		
Aluminum	1/4 (8A)	10	**VXD230**	0.02	0.9	0.7	8.5	0.35	2.0	—	1.5	370
	3/8 (10A)						9.2		2.4			370
	1/2 (15A)						9.2		2.4			370
Resin	ø10						5.6	0.33	1.3			330
	ø3/8"						4.8	0.33	0.9			330
	ø12						7.2	0.33	1.5			330
Stainless steel, C37	3/8 (10A)	15	**VXD240**		1.0	1.0	18.0	0.35	5.0			720
	1/2 (15A)						20.0		5.5			720
	3/4 (20A)	20	**VXD250**				38.0	0.30	9.5			840
	1 (25A)	25	**VXD260**				—			225		1360
CAC408	32A Flange	35	**VXD270**	0.03						415		5400
	40A Flange	40	**VXD280**							560		6800
	50A Flange	50	**VXD290**							880		8400

Note 1) Be aware that even if the pressure differential is above the minimum operating pressure differential when the valve is closed, the pressure differential may fall below the minimum operating pressure differential when the valve opens, depending on the power of the supply source (pumps, compressors, etc.,) or the type of pipe restrictions.
Note 2) Weight of grommet type. Add 10 g for conduit type, 30 g for DIN terminal type, 60 g for conduit terminal type respectively.
Note 3) Refer to “Glossary of Terms” on page 156 for details on the minimum operating pressure differential, maximum operating pressure differential, maximum system pressure.

Fluid and Ambient Temperature

Fluid temperature (°C)	Ambient temperature (°C)
–10 Note) to 60	–20 to 60

Note) Dew point temperature: –10°C or less

Valve Leakage Rate

Internal Leakage

Seal material	Leakage rate (Air) Note 1)	
	VXD23 to 26 (8A to 25A)	**VXD27 to 29** (32A to 50A)
NBR (FKM) Note 2)	15 cm³/min or less (Aluminum body type)	10 cm³/min or less
	15 cm³/min or less (Resin body type)	
	2 cm³/min or less (Metal body type)	

External Leakage

Seal material	Leakage rate (Air) Note 1)	
	VXD23 to 26 (8A to 25A)	**VXD27 to 29** (32A to 50A)
NBR (FKM) Note 2)	15 cm³/min or less (Aluminum body type)	1 cm³/min or less
	15 cm³/min or less (Resin body type)	
	1 cm³/min or less (Metal body type)	

Note 1) Leakage is the value at ambient temperature 20°C.
Note 2) For seal material/FKM, refer to “Other options” on page 133 for the selection.

Model/Valve Specifications

N.O.

Symbol

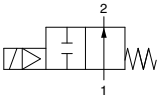

Refer to "Glossary of Terms" on page 156 for symbol.

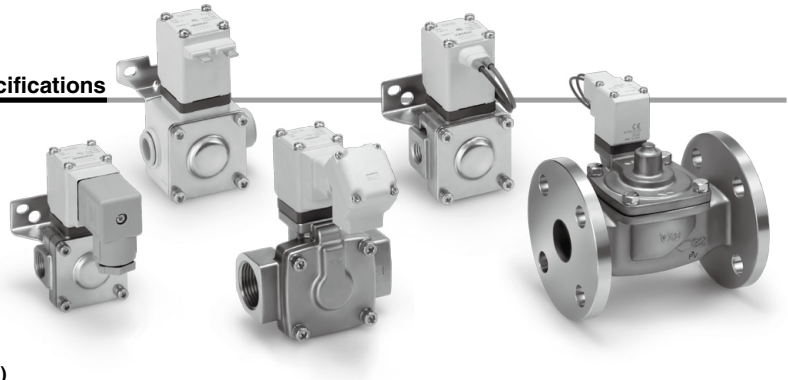

Normally Open (N.O.)

Body material	Port size	Orifice diameter (mmø)	Model	Min. operating pressure differential Note 1, 3) (MPa)	Max. operating pressure differential Note 3)		Flow rate characteristics				Max. system pressure Note 3) (MPa)	Weight Note 2) (g)
					AC	DC	C	b	Cv	Effective area (mm²)		
Aluminum	1/4 (8A)	10	**VXD2A0**	0.02	0.6	0.4	8.5	0.35	2.0	—	1.5	390
	3/8 (10A)						9.2		2.4			390
	1/2 (15A)						9.2		2.4			390
Resin	ø10						5.6	0.33	1.3			350
	ø3/8"						4.8		0.9			350
	ø12						7.2		1.5			350
Stainless steel, C37	3/8 (10A)	15	**VXD2B0**		0.7	0.7	18.0	0.35	5.0			740
	1/2 (15A)						20.0		5.5			740
	3/4 (20A)	20	**VXD2C0**				38.0	0.30	9.5			860
	1 (25A)	25	**VXD2D0**				—			225		1390
CAC408	32A Flange	35	**VXD2E0**	0.03						415		5430
	40A Flange	40	**VXD2F0**							560		6840
	50A Flange	50	**VXD2G0**							880		8440

Note 1) Be aware that even if the pressure differential is above the minimum operating pressure differential when the valve is closed, the pressure differential may fall below the minimum operating pressure differential when the valve opens, depending on the power of the supply source (pumps, compressors, etc.,) or the type of pipe restrictions.
Note 2) Weight of grommet type. Add 10 g for conduit type, 30 g for DIN terminal type, 60 g for conduit terminal type respectively.
Note 3) Refer to "Glossary of Terms" on page 156 for details on the minimum operating pressure differential, maximum operating pressure differential, maximum system pressure.

Fluid and Ambient Temperature

Fluid temperature (°C)	Ambient temperature (°C)
–10 Note) to 60	–20 to 60

Note) Dew point temperature: –10°C or less

Valve Leakage Rate

Internal Leakage

Seal material	Leakage rate (Air) Note 1)	
	VXD2A to 2D (8A to 25A)	**VXD2E to 2G** (32A to 50A)
NBR (FKM) Note 2)	15 cm³/min or less (Aluminum body type)	10 cm³/min or less
	15 cm³/min or less (Resin body type)	
	2 cm³/min or less (Metal body type)	

External Leakage

Seal material	Leakage rate (Air) Note 1)	
	VXD2A to 2D (8A to 25A)	**VXD2E to 2G** (32A to 50A)
NBR (FKM) Note 2)	15 cm³/min or less (Aluminum body type)	1 cm³/min or less
	15 cm³/min or less (Resin body type)	
	1 cm³/min or less (Metal body type)	

Note 1) Leakage is the value at ambient temperature 20°C.
Note 2) For seal material/FKM, refer to "Other options" on page 133 for the selection.

How to Order

CE RoHS

VXD2 3 0 A A

Fluid

0	For Air

Common Specifications

Seal material	NBR
Coil insulation type	Class B
Thread type	Rc*

* When the body is resin, one-touch fittings are supplied. For body size 32A or more, the ports will be the flange type.

Size—Valve type

Symbol	Size	Valve type
3	8A, 10A, 15A	N.C.
A		N.O.
4	10A, 15A	N.C.
B		N.O.
5	20A	N.C.
C		N.O.
6	25A	N.C.
D		N.O.
7	32A	N.C.
E		N.O.
8	40A	N.C.
F		N.O.
9	50A	N.C.
G		N.O.

Body material/Port size/Orifice diameter

Symbol	Body material	Port size	Orifice diameter
A	Aluminum	1/4	10
B		3/8	
C		1/2	
D	Resin	ø10 One-touch fitting	
E		ø3/8" One-touch fitting	
F		ø12 One-touch fitting	
G	C37	3/8	15
H		1/2	
J	Stainless steel	3/8	
K		1/2	
L	C37	3/4	20
M	Stainless steel		
N	C37	1	25
P	Stainless steel		
Q	CAC408	32A Flange	35
R	CAC408	40A Flange	40
S	CAC408	50A Flange	50

Voltage/Electrical entry

Symbol	Voltage	Electrical entry
A	24 VDC	Grommet 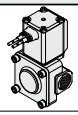
B	100 VAC	Grommet (With surge voltage suppressor)
C	110 VAC	
D	200 VAC	
E	230 VAC	
F	24 VDC	
G	24 VDC	DIN terminal (With surge voltage suppressor) 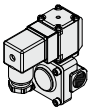
H	100 VAC	
J	110 VAC	
K	200 VAC	
L	230 VAC	
M	24 VDC	Conduit terminal (With surge voltage suppressor) 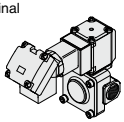
N	100 VAC	
P	110 VAC	
Q	200 VAC	
R	230 VAC	
S	24 VDC	Conduit (With surge voltage suppressor) 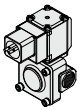
T	100 VAC	
U	110 VAC	
V	200 VAC	
W	230 VAC	
Y	24 VDC	Flat terminal
Z	Other special options	

For other special options, refer to page 133.

Special voltage	24 VAC
	48 VAC
	220 VAC
	240 VAC
	12 VDC
DIN terminal with light	
Conduit terminal with light	
Without DIN connector	
Low concentration ozone resistant (Seal material: FKM)	
Seal material: EPDM	
Oil-free	
G thread	
NPT thread	
With bracket	
Special electrical entry direction	

Dimensions → Page on and after 138 (Single Unit)

For Water

∗ Possible to use this for air.
Note that the maximum operating pressure differential and flow rate characteristics should be within the specifications for air.

Model/Valve Specifications

N.C.

Symbol

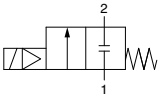

Refer to "Glossary of Terms" on page 156 for symbol.

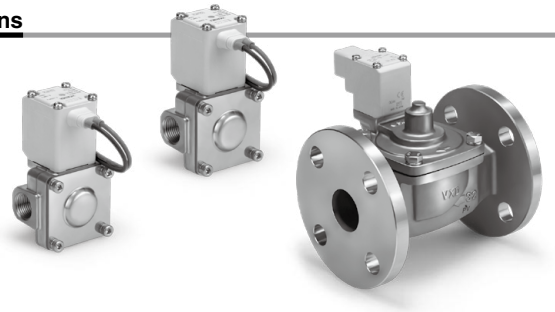

Normally Closed (N.C.)

Body material	Port size	Orifice diameter (mmø)	Model	Min. operating pressure differential Note 1, 3) (MPa)	Max. operating pressure differential Note 3)		Flow rate characteristics		Max. system pressure Note 3) (MPa)	Weight Note 2) (g)
					AC	DC	Kv	Conversion Cv		
Stainless steel, C37	1/4 (8A)	10	**VXD232**	0.02	0.7	0.5	1.6	1.9	1.5	480
	3/8 (10A)						2.0	2.4		480
	1/2 (15A)						2.0	2.4		480
	3/8 (10A)	15	**VXD242**		1.0	1.0	3.9	4.5		720
	1/2 (15A)						4.6	5.5		720
	3/4 (20A)	20	**VXD252**				8.2	9.5		840
	1 (25A)	25	**VXD262**				11.0	13		1360
CAC408	32A Flange	35	**VXD272**	0.03			19.6	23		5400
	40A Flange	40	**VXD282**				26.4	31		6800
	50A Flange	50	**VXD292**				42.8	49		8400

Note 1) Be aware that even if the pressure differential is above the minimum operating pressure differential when the valve is closed, the pressure differential may fall below the minimum operating pressure differential when the valve opens, depending on the power of the supply source (pumps, compressors, etc.,) or the type of pipe restrictions.
Note 2) Weight of grommet type. Add 10 g for conduit type, 30 g for DIN terminal type, 60 g for conduit terminal type respectively.
Note 3) Refer to "Glossary of Terms" on page 156 for details on the minimum operating pressure differential, maximum operating pressure differential, maximum system pressure.

Fluid and Ambient Temperature

Fluid temperature (°C)	Ambient temperature (°C)
1 to 60 Note)	–20 to 60

Note) No freezing

Valve Leakage Rate

Internal Leakage

Seal material	Leakage rate (Water) Note 1)	
	VXD23 to 26 (8A to 25A)	**VXD27 to 29** (32A to 50A)
NBR (FKM) Note 2)	0.2 cm^3/min or less	1 cm^3/min or less

External Leakage

Seal material	Leakage rate (Water) Note 1)	
	VXD23 to 26 (8A to 25A)	**VXD27 to 29** (32A to 50A)
NBR (FKM) Note 2)	0.1 cm^3/min or less	0.1 cm^3/min or less

Note 1) Leakage is the value at ambient temperature 20°C.
Note 2) For seal material/FKM, refer to "Other options" on page 133 for the selection.

Model/Valve Specifications

N.O.

Symbol

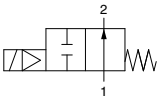

Refer to "Glossary of Terms" on page 156 for symbol.

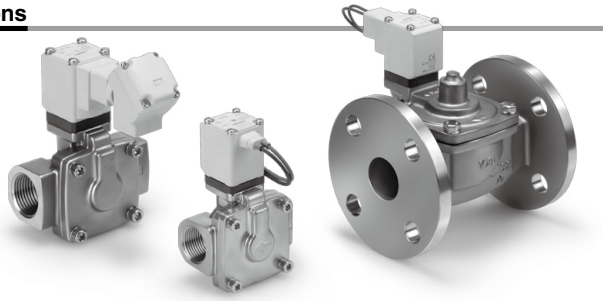

Normally Open (N.O.)

Body material	Port size	Orifice diameter (mmø)	Model	Min. operating pressure differential Note 1, 3) (MPa)	Max. operating pressure differential Note 3) AC	Max. operating pressure differential Note 3) DC	Flow rate characteristics Kv	Flow rate characteristics Conversion Cv	Max. system pressure Note 3) (MPa)	Weight Note 2) (g)
Stainless steel, C37	1/4 (8A)	10	**VXD2A2**	0.02	0.4	0.3	1.6	1.9	1.5	500
	3/8 (10A)						2.0	2.4		500
	1/2 (15A)						2.0	2.4		500
	3/8 (10A)	15	**VXD2B2**		0.7	0.7	3.9	4.5		740
	1/2 (15A)						4.6	5.5		740
	3/4 (20A)	20	**VXD2C2**				8.2	9.5		860
	1 (25A)	25	**VXD2D2**				11.0	13		1390
CAC408	32A Flange	35	**VXD2E2**	0.03			19.6	23		5430
	40A Flange	40	**VXD2F2**				26.4	31		6840
	50A Flange	50	**VXD2G2**				42.8	49		8440

Note 1) Be aware that even if the pressure differential is above the minimum operating pressure differential when the valve is closed, the pressure differential may fall below the minimum operating pressure differential when the valve opens, depending on the power of the supply source (pumps, compressors, etc.,) or the type of pipe restrictions.
Note 2) Weight of grommet type. Add 10 g for conduit type, 30 g for DIN terminal type, 60 g for conduit terminal type respectively.
Note 3) Refer to "Glossary of Terms" on page 156 for details on the minimum operating pressure differential, maximum operating pressure differential, maximum system pressure.

Fluid and Ambient Temperature

Fluid temperature (°C)	Ambient temperature (°C)
1 to 60 Note)	–20 to 60

Note) No freezing

Valve Leakage Rate

Internal Leakage

Seal material	Leakage rate (Water) Note 1) **VXD2A to 2D** (8A to 25A)	Leakage rate (Water) Note 1) **VXD2E to 2G** (32A to 50A)
NBR (FKM) Note 2)	0.2 cm^3/min or less	1 cm^3/min or less

External Leakage

Seal material	Leakage rate (Water) Note 1) **VXD2A to 2D** (8A to 25A)	Leakage rate (Water) Note 1) **VXD2E to 2G** (32A to 50A)
NBR (FKM) Note 2)	0.1 cm^3/min or less	0.1 cm^3/min or less

Note 1) Leakage is the value at ambient temperature 20°C.
Note 2) For seal material/FKM, refer to "Other options" on page 133 for the selection.

How to Order

VXD2 3 2 A A

Fluid

2	For Water

Common Specifications

Seal material	NBR
Coil insulation type	Class B
Thread type	Rc*

* For body size 32A or more, the ports will be the flange type.

Size—Valve type

Symbol	Size	Valve type
3	8A, 10A, 15A	N.C.
A		N.O.
4	10A, 15A	N.C.
B		N.O.
5	20A	N.C.
C		N.O.
6	25A	N.C.
D		N.O.
7	32A	N.C.
E		N.O.
8	40A	N.C.
F		N.O.
9	50A	N.C.
G		N.O.

Body material/Port size/Orifice diameter

Symbol	Body material	Port size	Orifice diameter
A	C37	1/4	10
B		3/8	
C		1/2	
D	Stainless steel	1/4	
E		3/8	
F		1/2	
G	C37	3/8	15
H		1/2	
J	Stainless steel	3/8	
K		1/2	
L	C37	3/4	20
M	Stainless steel		
N	C37	1	25
P	Stainless steel		
Q	CAC408	32A Flange	35
R	CAC408	40A Flange	40
S	CAC408	50A Flange	50

Voltage/Electrical entry

Symbol	Voltage	Electrical entry
A	24 VDC	Grommet 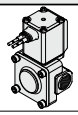
B	100 VAC	Grommet (With surge voltage suppressor)
C	110 VAC	
D	200 VAC	
E	230 VAC	
F	24 VDC	
G	24 VDC	DIN terminal (With surge voltage suppressor) 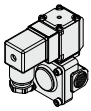
H	100 VAC	
J	110 VAC	
K	200 VAC	
L	230 VAC	
M	24 VDC	Conduit terminal (With surge voltage suppressor) 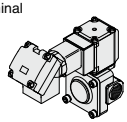
N	100 VAC	
P	110 VAC	
Q	200 VAC	
R	230 VAC	
S	24 VDC	Conduit (With surge voltage suppressor)
T	100 VAC	
U	110 VAC	
V	200 VAC	
W	230 VAC	
Y	24 VDC	Flat terminal
Z	Other voltages and electrical option	

For other special options, refer to page 133.

Special voltage	24 VAC
	48 VAC
	220 VAC
	240 VAC
	12 VDC
DIN terminal with light	
Conduit terminal with light	
Without DIN connector	
Applicable to deionized water (Seal material: FKM)	
Seal material: EPDM	
Oil-free	
G thread	
NPT thread	
With bracket	
Special electrical entry direction	

Dimensions → Page on and after 140 (Single Unit)

For Oil

∗ Possible to use this for air and water.
Note that the maximum operating pressure differential and flow rate characteristics should be within the specifications of the fluid used.

⚠When the fluid is oil.

The kinematic viscosity must not exceed 50 mm²/s. The special construction of the armature adopted in the built-in full-wave rectifier type gives an improvement in OFF response by providing clearance on the absorbed surface when it is switched ON.

Model/Valve Specifications

N.C.

Symbol

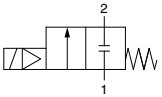

Refer to "Glossary of Terms" on page 156 for symbol.

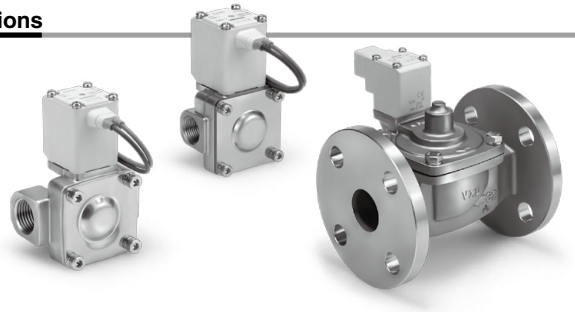

Normally Closed (N.C.)

Body material	Port size	Orifice diameter (mmø)	Model	Min. operating pressure differential Note 1, 3) (MPa)	Max. operating pressure differential Note 3)		Flow rate characteristics		Max. system pressure Note 3) (MPa)	Weight Note 2) (g)
					AC	DC	Kv	Conversion Cv		
Stainless steel, C37	1/4 (8A)	10	**VXD233**	0.02	0.5	0.4	1.6	1.9	1.5	480
	3/8 (10A)						2.0	2.4		480
	1/2 (15A)						2.0	2.4		480
	3/8 (10A)	15	**VXD243**		0.7	0.7	3.9	4.5		720
	1/2 (15A)						4.6	5.5		720
	3/4 (20A)	20	**VXD253**				8.2	9.5		840
	1 (25A)	25	**VXD263**				11.0	13		1360
CAC408	32A Flange	35	**VXD273**	0.03			19.6	23		5400
	40A Flange	40	**VXD283**				26.4	31		6800
	50A Flange	50	**VXD293**				42.8	49		8400

Note 1) Be aware that even if the pressure differential is above the minimum operating pressure differential when the valve is closed, the pressure differential may fall below the minimum operating pressure differential when the valve opens, depending on the power of the supply source (pumps, compressors, etc.,) or the type of pipe restrictions.
Note 2) Weight of grommet type. Add 10 g for conduit type, 30 g for DIN terminal type, 60 g for conduit terminal type respectively.
Note 3) Refer to "Glossary of Terms" on page 156 for details on the minimum operating pressure differential, maximum operating pressure differential, maximum system pressure.

Fluid and Ambient Temperature

Fluid temperature (°C)	Ambient temperature (°C)
–5 Note) to 60	–20 to 60

Note) Kinematic viscosity: 50 mm²/s or less

Valve Leakage Rate

Internal Leakage

Seal material	Leakage rate (Oil) Note)	
	VXD23 to 26 (8A to 25A)	**VXD27 to 29** (32A to 50A)
FKM	0.2 cm³/min or less	1 cm³/min or less

External Leakage

Seal material	Leakage rate (Oil) Note)	
	VXD23 to 26 (8A to 25A)	**VXD27 to 29** (32A to 50A)
FKM	0.1 cm³/min or less	0.1 cm³/min or less

Note) Leakage is the value at ambient temperature 20°C.

⚠When the fluid is oil.

The kinematic viscosity must not exceed 50 mm²/s. The special construction of the armature adopted in the built-in full-wave rectifier type gives an improvement in OFF response by providing clearance on the absorbed surface when it is switched ON.

Model/Valve Specifications

N.O.

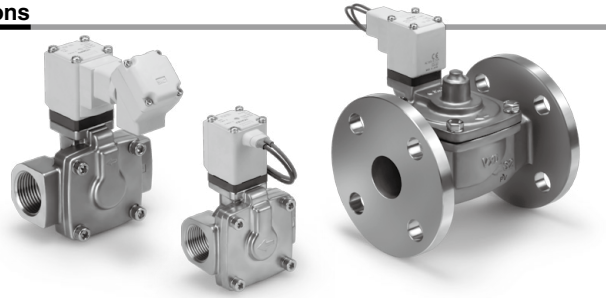

Symbol

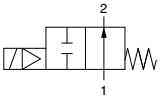

Refer to "Glossary of Terms" on page 156 for symbol.

Normally Open (N.O.)

Body material	Port size	Orifice diameter (mmø)	Model	Min. operating pressure differential Note 1, 3) (MPa)	Max. operating pressure differential Note 3)		Flow rate characteristics		Max. system pressure Note 3) (MPa)	Weight Note 2) (g)
					AC	DC	Kv	Conversion Cv		
Stainless steel, C37	1/4 (8A)	10	**VXD2A3**	0.02	0.4	0.3	1.6	1.9	1.5	500
	3/8 (10A)						2.0	2.4		500
	1/2 (15A)						2.0	2.4		500
	3/8 (10A)	15	**VXD2B3**		0.6	0.6	3.9	4.5		740
	1/2 (15A)						4.6	5.5		740
	3/4 (20A)	20	**VXD2C3**				8.2	9.5		860
	1 (25A)	25	**VXD2D3**				11.0	13		1390
CAC408	32A Flange	35	**VXD2E3**	0.03			19.6	23		5430
	40A Flange	40	**VXD2F3**				26.4	31		6840
	50A Flange	50	**VXD2G3**				42.8	49		8440

Note 1) Be aware that even if the pressure differential is above the minimum operating pressure differential when the valve is closed, the pressure differential may fall below the minimum operating pressure differential when the valve opens, depending on the power of the supply source (pumps, compressors, etc.,) or the type of pipe restrictions.
Note 2) Weight of grommet type. Add 10 g for conduit type, 30 g for DIN terminal type, 60 g for conduit terminal type respectively.
Note 3) Refer to "Glossary of Terms" on page 156 for details on the minimum operating pressure differential, maximum operating pressure differential, maximum system pressure.

Fluid and Ambient Temperature

Fluid temperature (°C)	Ambient temperature (°C)
–5 Note) to 60	–20 to 60

Note) Kinematic viscosity: 50 mm²/s or less

Valve Leakage Rate

Internal Leakage

Seal material	Leakage rate (Oil) Note)	
	VXD2A to 2D (8A to 25A)	**VXD2E to 2G** (32A to 50A)
FKM	0.2 cm³/min or less	1 cm³/min or less

External Leakage

Seal material	Leakage rate (Oil) Note)	
	VXD2A to 2D (8A to 25A)	**VXD2E to 2G** (32A to 50A)
FKM	0.1 cm³/min or less	0.1 cm³/min or less

Note) Leakage is the value at ambient temperature 20°C.

How to Order

CE RoHS

VXD2 3 3 A A

Fluid

3	For Oil

Common Specifications

Seal material	FKM
Coil insulation type	Class B
Thread type	Rc*

* For body size 32A or more, the ports will be the flange type.

Size—Valve type

Symbol	Size	Valve type
3	8A 10A 15A	N.C.
A		N.O.
4	10A 15A	N.C.
B		N.O.
5	20A	N.C.
C		N.O.
6	25A	N.C.
D		N.O.
7	32A	N.C.
E		N.O.
8	40A	N.C.
F		N.O.
9	50A	N.C.
G		N.O.

Body material/Port size/Orifice diameter

Symbol	Body material	Port size	Orifice diameter
A	C37	1/4	10
B		3/8	
C		1/2	
D	Stainless steel	1/4	
E		3/8	
F		1/2	
G	C37	3/8	15
H		1/2	
J	Stainless steel	3/8	
K		1/2	
L	C37	3/4	20
M	Stainless steel		
N	C37	1	25
P	Stainless steel		
Q	CAC408	32A Flange	35
R	CAC408	40A Flange	40
S	CAC408	50A Flange	50

Voltage/Electrical entry

Symbol	Voltage	Electrical entry
A	24 VDC	Grommet 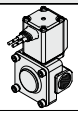
B	100 VAC	Grommet (With surge voltage suppressor)
C	110 VAC	
D	200 VAC	
E	230 VAC	
F	24 VDC	
G	24 VDC	DIN terminal (With surge voltage suppressor) 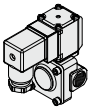
H	100 VAC	
J	110 VAC	
K	200 VAC	
L	230 VAC	
M	24 VDC	Conduit terminal (With surge voltage suppressor) 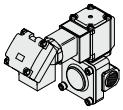
N	100 VAC	
P	110 VAC	
Q	200 VAC	
R	230 VAC	
S	24 VDC	Conduit (With surge voltage suppressor)
T	100 VAC	
U	110 VAC	
V	200 VAC	
W	230 VAC	
Y	24 VDC	Flat terminal
Z	Other voltages and electrical option	

For other special options, refer to page 133.

Special voltage	24 VAC
	48 VAC
	220 VAC
	240 VAC
	12 VDC
DIN terminal with light	
Conduit terminal with light	
Without DIN connector	
Oil-free	
G thread	
NPT thread	
With bracket	
Special electrical entry direction	

Dimensions → Page on and after 140 (Single Unit)

For Heated water

∗ Possible to use this for air (up to 99°C) and water.
Note that the maximum operating pressure differential and flow rate characteristics should be within the specifications of the fluid used.

Model/Valve Specifications

N.C.

Symbol

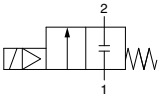

Refer to "Glossary of Terms" on page 156 for symbol.

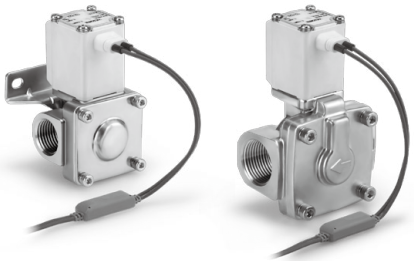

Normally Closed (N.C.)

Body material	Port size	Orifice diameter (mmø)	Model	Min. operating pressure differential Note 1, 3) (MPa)	Max. operating pressure differential Note 3)		Flow rate characteristics		Max. system pressure Note 3) (MPa)	Weight Note 2) (g)
					AC	DC	Kv	Conversion Cv		
Stainless steel, C37	1/4 (8A)	10	**VXD235**	0.02	0.7	0.5	1.6	1.9	1.5	480
	3/8 (10A)						2.0	2.4		480
	1/2 (15A)						2.0	2.4		480
	3/8 (10A)	15	**VXD245**		1.0	1.0	3.9	4.5		720
	1/2 (15A)						4.6	5.5		720
	3/4 (20A)	20	**VXD255**				8.2	9.5		840
	1 (25A)	25	**VXD265**				11.0	13		1360
CAC408	32A Flange	35	**VXD275**	0.03			19.6	23		5400
	40A Flange	40	**VXD285**				26.4	31		6800
	50A Flange	50	**VXD295**				42.8	49		8400

Note 1) Be aware that even if the pressure differential is above the minimum operating pressure differential when the valve is closed, the pressure differential may fall below the minimum operating pressure differential when the valve opens, depending on the power of the supply source (pumps, compressors, etc.,) or the type of pipe restrictions.
Note 2) Weight of grommet type. Add 10 g for conduit type, 60 g for conduit terminal type respectively.
Note 3) Refer to "Glossary of Terms" on page 156 for details on the minimum operating pressure differential, maximum operating pressure differential, maximum system pressure.

Fluid and Ambient Temperature

Fluid temperature (°C)	Ambient temperature (°C)
1 to 99	–20 to 60

Note) No freezing

Valve Leakage Rate

Internal Leakage

Seal material	Leakage rate (Water) Note)	
	VXD23 to 26 (8A to 25A)	**VXD27 to 29** (32A to 50A)
EPDM	0.2 cm^3/min or less	1 cm^3/min or less

External Leakage

Seal material	Leakage rate (Water) Note)	
	VXD23 to 26 (8A to 25A)	**VXD27 to 29** (32A to 50A)
EPDM	0.1 cm^3/min or less	0.1 cm^3/min or less

Note) Leakage is the value at ambient temperature 20°C.

Model/Valve Specifications

N.O.

Symbol

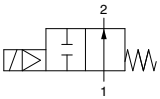

Refer to "Glossary of Terms" on page 156 for symbol.

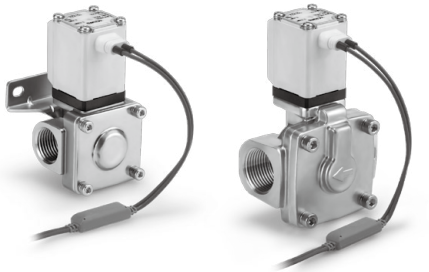

Normally Open (N.O.)

Body material	Port size	Orifice diameter (mmø)	Model	Min. operating pressure differential Note 1, 3) (MPa)	Max. operating pressure differential Note 3) AC	Max. operating pressure differential Note 3) DC	Flow rate characteristics Kv	Flow rate characteristics Conversion Cv	Max. system pressure Note 3) (MPa)	Weight Note 2) (g)
Stainless steel, C37	1/4 (8A)	10	**VXD2A5**	0.02	0.4	0.3	1.6	1.9	1.5	500
	3/8 (10A)						2.0	2.4		500
	1/2 (15A)						2.0	2.4		500
	3/8 (10A)	15	**VXD2B5**		0.7	0.7	3.9	4.5		740
	1/2 (15A)						4.6	5.5		740
	3/4 (20A)	20	**VXD2C5**				8.2	9.5		860
	1 (25A)	25	**VXD2D5**				11.0	13		1390
CAC408	32A Flange	35	**VXD2E5**	0.03			19.6	23		5430
	40A Flange	40	**VXD2F5**				26.4	31		6840
	50A Flange	50	**VXD2G5**				42.8	49		8440

Note 1) Be aware that even if the pressure differential is above the minimum operating pressure differential when the valve is closed, the pressure differential may fall below the minimum operating pressure differential when the valve opens, depending on the power of the supply source (pumps, compressors, etc.,) or the type of pipe restrictions.
Note 2) Weight of grommet type. Add 10 g for conduit type, 60 g for conduit terminal type respectively.
Note 3) Refer to "Glossary of Terms" on page 156 for details on the minimum operating pressure differential, maximum operating pressure differential, maximum system pressure.

Fluid and Ambient Temperature

Fluid temperature (°C)	Ambient temperature (°C)
1 to 99	–20 to 60

Note) No freezing

Valve Leakage Rate

Internal Leakage

Seal material	Leakage rate (Water) Note)	
	VXD2A to 2D (8A to 25A)	**VXD2E to 2G** (32A to 50A)
EPDM	0.2 cm^3/min or less	1 cm^3/min or less

External Leakage

Seal material	Leakage rate (Water) Note)	
	VXD2A to 2D (8A to 25A)	**VXD2E to 2G** (32A to 50A)
EPDM	0.1 cm^3/min or less	0.1 cm^3/min or less

Note) Leakage is the value at ambient temperature 20°C.

How to Order

VXD2 3 5 A B

Fluid

5	For Heated water

Common Specifications

Seal material	EPDM
Coil insulation type	Class H
Thread type	Rc*

* For body size 32A or more, the ports will be the flange type.

Size—Valve type

Symbol	Size	Valve type
3	8A, 10A, 15A	N.C.
A		N.O.
4	10A, 15A	N.C.
B		N.O.
5	20A	N.C.
C		N.O.
6	25A	N.C.
D		N.O.
7	32A	N.C.
E		N.O.
8	40A	N.C.
F		N.O.
9	50A	N.C.
G		N.O.

Body material/Port size/Orifice diameter

Symbol	Body material	Port size	Orifice diameter
A	C37	1/4	10
B		3/8	
C		1/2	
D	Stainless steel	1/4	
E		3/8	
F		1/2	
G	C37	3/8	15
H		1/2	
J	Stainless steel	3/8	
K		1/2	
L	C37	3/4	20
M	Stainless steel		
N	C37	1	25
P	Stainless steel		
Q	CAC408	32A Flange	35
R	CAC408	40A Flange	40
S	CAC408	50A Flange	50

Voltage/Electrical entry

Symbol	Voltage	Electrical entry
A	24 VDC	Grommet 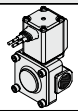
B	100 VAC	Grommet (With surge voltage suppressor) 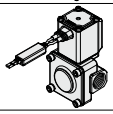
C	110 VAC	
D	200 VAC	
E	230 VAC	
G	24 VDC	DIN terminal (With surge voltage suppressor Note) 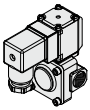
H	100 VAC	
J	110 VAC	
K	200 VAC	
L	230 VAC	
N	100 VAC	Conduit terminal (With surge voltage suppressor) 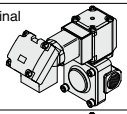
P	110 VAC	
Q	200 VAC	
R	230 VAC	
T	100 VAC	Conduit (With surge voltage suppressor) 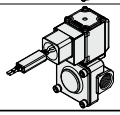
U	110 VAC	
V	200 VAC	
W	230 VAC	
Z	Other voltages	

Note) For the class H type DIN terminal, use it in combination with the connector provided.

For other special options, refer to page 133.

Special voltage	24 VAC
	48 VAC
	220 VAC
	240 VAC
Conduit terminal with light	
Oil-free	
G thread	
NPT thread	
With bracket	
Special electrical entry direction	

Dimensions → Page on and after 148 (Single Unit)

For High temperature oil

∗ Possible to use this for air (up to 99°C) and water.
Note that the maximum operating pressure differential and flow rate characteristics should be within the specifications of the fluid used.

⚠When the fluid is oil.

The kinematic viscosity must not exceed 50 mm²/s. The special construction of the armature adopted in the built-in full-wave rectifier type gives an improvement in OFF response by providing clearance on the absorbed surface when it is switched ON.

Model/Valve Specifications

N.C.

Symbol

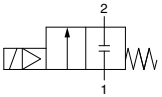

Refer to "Glossary of Terms" on page 156 for symbol.

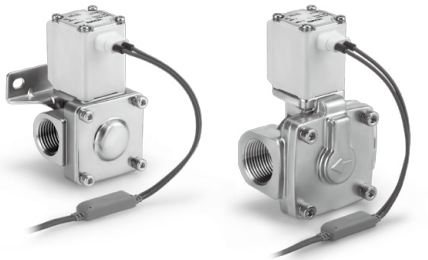

Normally Closed (N.C.)

Body material	Port size	Orifice diameter (mmø)	Model	Min. operating pressure differential Note 1, 3) (MPa)	Max. operating pressure differential Note 3)		Flow rate characteristics		Max. system pressure Note 3) (MPa)	Weight Note 2) (g)
					AC	DC	Kv	Conversion Cv		
Stainless steel, C37	1/4 (8A)	10	**VXD236**	0.02	0.5	0.4	1.6	1.9	1.5	480
	3/8 (10A)						2.0	2.4		480
	1/2 (15A)						2.0	2.4		480
	3/8 (10A)	15	**VXD246**		0.7	0.7	3.9	4.5		720
	1/2 (15A)						4.6	5.5		720
	3/4 (20A)	20	**VXD256**				8.2	9.5		840
	1 (25A)	25	**VXD266**				11.0	13		1360
CAC408	32A Flange	35	**VXD276**	0.03			19.6	23		5400
	40A Flange	40	**VXD286**				26.4	31		6800
	50A Flange	50	**VXD296**				42.8	49		8400

Note 1) Be aware that even if the pressure differential is above the minimum operating pressure differential when the valve is closed, the pressure differential may fall below the minimum operating pressure differential when the valve opens, depending on the power of the supply source (pumps, compressors, etc.,) or the type of pipe restrictions.
Note 2) Weight of grommet type. Add 10 g for conduit type, 60 g for conduit terminal type respectively.
Note 3) Refer to "Glossary of Terms" on page 156 for details on the minimum operating pressure differential, maximum operating pressure differential, maximum system pressure.

Fluid and Ambient Temperature

Fluid temperature (°C)	Ambient temperature (°C)
–5 Note) to 100	–20 to 60

Note) Kinematic viscosity: 50 mm²/s or less

Valve Leakage Rate

Internal Leakage

Seal material	Leakage rate (Oil) Note)	
	VXD23 to 26 (8A to 25A)	**VXD27 to 29** (32A to 50A)
FKM	0.2 cm³/min or less	1 cm³/min or less

External Leakage

Seal material	Leakage rate (Oil) Note)	
	VXD23 to 26 (8A to 25A)	**VXD27 to 29** (32A to 50A)
FKM	0.1 cm³/min or less	0.1 cm³/min or less

Note) Leakage is the value at ambient temperature 20°C.

For High temperature oil

⚠When the fluid is oil.

The kinematic viscosity must not exceed 50 mm²/s. The special construction of the armature adopted in the built-in full-wave rectifier type gives an improvement in OFF response by providing clearance on the absorbed surface when it is switched ON.

Model/Valve Specifications

N.O.

Symbol

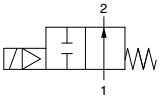

Refer to "Glossary of Terms" on page 156 for symbol.

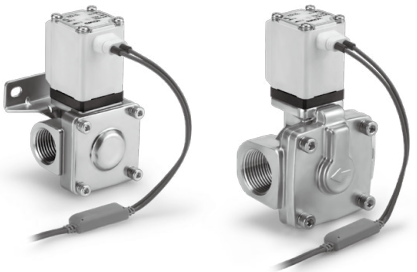

Normally Open (N.O.)

Body material	Port size	Orifice diameter (mmø)	Model	Min. operating pressure differential Note 1, 3) (MPa)	Max. operating pressure differential Note 3) AC	Max. operating pressure differential Note 3) DC	Flow rate characteristics Kv	Flow rate characteristics Conversion Cv	Max. system pressure Note 3) (MPa)	Weight Note 2) (g)
Stainless steel, C37	1/4 (8A)	10	**VXD2A6**	0.02	0.4	0.3	1.6	1.9	1.5	500
	3/8 (10A)						2.0	2.4		500
	1/2 (15A)						2.0	2.4		500
	3/8 (10A)	15	**VXD2B6**		0.6	0.6	3.9	4.5		740
	1/2 (15A)						4.6	5.5		740
	3/4 (20A)	20	**VXD2C6**				8.2	9.5		860
	1 (25A)	25	**VXD2D6**				11.0	13		1390
CAC408	32A Flange	35	**VXD2E6**	0.03			19.6	23		5430
	40A Flange	40	**VXD2F6**				26.4	31		6840
	50A Flange	50	**VXD2G6**				42.8	49		8440

Note 1) Be aware that even if the pressure differential is above the minimum operating pressure differential when the valve is closed, the pressure differential may fall below the minimum operating pressure differential when the valve opens, depending on the power of the supply source (pumps, compressors, etc.,) or the type of pipe restrictions.
Note 2) Weight of grommet type. Add 10 g for conduit type, 60 g for conduit terminal type respectively.
Note 3) Refer to "Glossary of Terms" on page 156 for details on the minimum operating pressure differential, maximum operating pressure differential, maximum system pressure.

Fluid and Ambient Temperature

Fluid temperature (°C)	Ambient temperature (°C)
–5 Note) to 100	–20 to 60

Note) Kinematic viscosity: 50 mm²/s or less

Valve Leakage Rate

Internal Leakage

Seal material	Leakage rate (Oil) Note)	
	VXD2A to 2D (8A to 25A)	**VXD2E to 2G** (32A to 50A)
FKM	0.2 cm³/min or less	1 cm³/min or less

External Leakage

Seal material	Leakage rate (Oil) Note)	
	VXD2A to 2D (8A to 25A)	**VXD2E to 2G** (32A to 50A)
FKM	0.1 cm³/min or less	0.1 cm³/min or less

Note) Leakage is the value at ambient temperature 20°C.

How to Order

VXD2 3 6 A B

Fluid

6	For High temperature oil

Common Specifications

Seal material	FKM
Coil insulation type	Class H
Thread type	Rc*

* For body size 32A or more, the ports will be the flange type.

Size—Valve type

Symbol	Size	Valve type
3	8A, 10A, 15A	N.C.
A		N.O.
4	10A, 15A	N.C.
B		N.O.
5	20A	N.C.
C		N.O.
6	25A	N.C.
D		N.O.
7	32A	N.C.
E		N.O.
8	40A	N.C.
F		N.O.
9	50A	N.C.
G		N.O.

Body material/Port size/Orifice diameter

Symbol	Body material	Port size	Orifice diameter
A	C37	1/4	10
B		3/8	
C		1/2	
D	Stainless steel	1/4	
E		3/8	
F		1/2	
G	C37	3/8	15
H		1/2	
J	Stainless steel	3/8	
K		1/2	
L	C37	3/4	20
M	Stainless steel		
N	C37	1	25
P	Stainless steel		
Q	CAC408	32A Flange	35
R	CAC408	40A Flange	40
S	CAC408	50A Flange	50

Voltage/Electrical entry

Symbol	Voltage	Electrical entry
A	24 VDC	Grommet 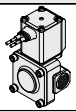
B	100 VAC	Grommet (With surge voltage suppressor) 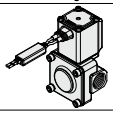
C	110 VAC	
D	200 VAC	
E	230 VAC	
G	24 VDC	DIN terminal (With surge voltage suppressor Note) 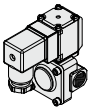
H	100 VAC	
J	110 VAC	
K	200 VAC	
L	230 VAC	
N	100 VAC	Conduit terminal (With surge voltage suppressor) 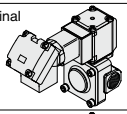
P	110 VAC	
Q	200 VAC	
R	230 VAC	
T	100 VAC	Conduit (With surge voltage suppressor) 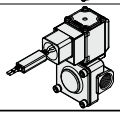
U	110 VAC	
V	200 VAC	
W	230 VAC	
Z	Other voltages	

Note) For the class H type DIN terminal, use it in combination with the connector provided.

For other special options, refer to page 133.

Special voltage	24 VAC
	48 VAC
	220 VAC
	240 VAC
Conduit terminal with light	
Oil-free	
G thread	
NPT thread	
With bracket	
Special electrical entry direction	

Dimensions → Page on and after 148 (Single Unit)

Other Special Options

Electrical Options
(Special voltage, With light, Without DIN connector)

VXD2 3 0 A Z 1A

- Enter standard product number.
- Electrical option

Electrical specification/Voltage/Electrical entry

Specification	Symbol	Class H*	Voltage	Electrical entry
Special voltage	1A	●	48 VAC	Grommet (With surge voltage suppressor)
	1B	●	220 VAC	
	1C	●	240 VAC	
	1U	●	24 VAC	
	1D	—	12 VDC	Grommet
	1E	—	12 VDC	Grommet (With surge voltage suppressor)
	1F	●	48 VAC	DIN terminal (With surge voltage suppressor)
	1G	●	220 VAC	
	1H	●	240 VAC	
	1V	●	24 VAC	
	1J	—	12 VDC	
	1K	●	48 VAC	Conduit terminal (With surge voltage suppressor)
	1L	●	220 VAC	
	1M	●	240 VAC	
	1W	●	24 VAC	
	1N	—	12 VDC	
	1P	●	48 VAC	Conduit (With surge voltage suppressor)
	1Q	●	220 VAC	
	1R	●	240 VAC	
	1Y	●	24 VAC	
	1S	—	12 VDC	
	1T	—	12 VDC	Flat terminal
With light	2A	●	24 VDC	DIN terminal (With surge voltage suppressor)
	2B	●	100 VAC	
	2C	●	110 VAC	
	2D	●	200 VAC	
	2E	●	230 VAC	
	2F	●	48 VAC	
	2G	●	220 VAC	
	2H	●	240 VAC	
	2V	●	24 VAC	
	2J	—	12 VDC	
	2K	—	24 VDC	Conduit terminal (With surge voltage suppressor)
	2L	●	100 VAC	
	2M	●	110 VAC	
	2N	●	200 VAC	
	2P	●	230 VAC	
	2Q	●	48 VAC	
	2R	●	220 VAC	
	2S	●	240 VAC	
	2W	●	24 VAC	
	2T	—	12 VDC	
Without DIN connector	3A	—	24 VDC	DIN terminal (With surge voltage suppressor)
	3B	—	100 VAC	
	3C	—	110 VAC	
	3D	—	200 VAC	
	3E	—	230 VAC	
	3F	—	48 VAC	
	3G	—	220 VAC	
	3H	—	240 VAC	
	3V	—	24 VAC	
	3J	—	12 VDC	

∗ Options marked with ● are available for Class "H" coil. Applicable for all when the coil insulation class is Class "B".

Other Options
(Low concentration ozone resistant and applicable to deionized water, Oil-free, Port thread)

VXD2 3 0 A A Z

- Enter standard product number.
- Other option (Low concentration ozone resistant and applicable to deionized water/Oil-free/Port thread)

Symbol	Low concentration ozone resistant and applicable to deionized water ∗1, ∗4 (Seal material: FKM)	Oil-free	Port thread∗3
Nil	—	—	Rc, With One-touch fitting∗2
A	—	—	G∗5
B			NPT
C	○	—	Rc, With One-touch fitting∗2
D	—	○	G∗5
E			NPT
F	○	—	G∗5
G			NPT
H	○	○	Rc, With One-touch fitting∗2
K			G∗5
L			NPT
Z	—	○	Rc, With One-touch fitting∗2

∗1 Applicable to air (VXD2□0) and water (VXD2□2).
∗2 One-touch fittings are attached to the resin body type.
∗3 Only flange type is available for 32A to 50A. Rc, G, and NPT cannot be selected.
∗4 When using deionized water or any other fluid that may corrode C37 (brass), select a stainless steel body.
∗5 For connection, prepare a fitting compliant with ISO 16030 and JIS B 8674.

Made to Order

<Special lead wire length>

Produced upon receipt of order. Please contact SMC for lead times.

VXD □ □ □ □ XL □

- Lead wire length

XL1	600 mm
XL2	1000 mm
XL3	1500 mm
XL4	3000 mm

∗ Enter symbols in the order below when ordering a combination of electrical option, other option, etc.

Example) VXD2 3 2 A Z 1A Z

- Electrical option
- Other option

Installation Options
(Special Electrical Entry Direction/Mounting Option)

The following shows combinations that can be selected using installation options.

Combinations

Symbol	Special electrical entry direction	With bracket	Seal material: EPDM
XC□	●		●
XB□	●	●	
X332□	●	●	●

Special Electrical Entry Direction

VXD2□□□□XC A

Enter standard product number.

Special electrical entry direction

Symbol	VXD2$^{3}_{A}$ to VXD2$^{6}_{D}$	VXD2$^{7}_{E}$ to VXD2$^{9}_{G}$
A	90° / 90° / IN / OUT	90° / 90°* / OUT / IN
B	180° / 180° / IN / OUT	180° / 180°* / OUT / IN
C	270° / 270° / IN / OUT	270° / 270°* / OUT / IN

∗ For the VXD2$^{7}_{E}$ to VXD2$^{9}_{G}$, only grommet and flat terminal types are applicable.

With Bracket/Special Electrical Entry Direction

VXD2□□□□XB A

Enter standard product number.

With bracket/Special electrical entry direction

Symbol	VXD2$^{3}_{A}$ to VXD2$^{6}_{D}$		
Nil	Standard / IN / OUT	B	180° / 180° / IN / OUT
A	90° / 90° / IN / OUT	C	270° / 270° / IN / OUT

∗1 Available for the VXD2$^{3}_{A}$ to 2$^{6}_{D}$.
∗2 Bracket is attached as standard with the resin body type (VXD2$^{3}_{A}$0$^{D}_{E}$□), so it is no necessary to add XB to the part number.
∗3 The bracket for aluminum, C37 and stainless steel body type of the VXD23 is shipped together with the product, but not assembled. (Refer to the figure below for mounting.)

VXD2$^{3}_{A}$□ Bracket mounting dimensions

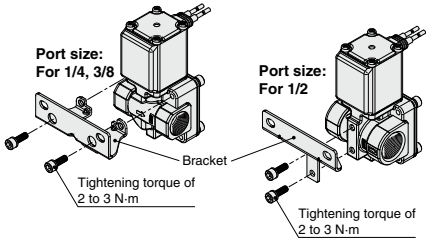

∗ Enter symbols in the order below when ordering a combination of electrical option, other option, etc.

Example) **VXD2 3 2 A Z 1A Z XB A**

- Electrical option
- Special electrical entry direction
- Other option
- With bracket

Installation Options
(Special Electrical Entry Direction/Mounting Option)

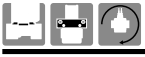

Seal Material: EPDM/With Bracket/ Special Electrical Entry Direction

VXD2 □ 0/2 □ □ X332 □

- **Enter standard product number.**
- **EPDM specification**
- **With bracket/Special electrical entry direction**

Symbol	Specifications	
	Electrical entry direction	Bracket
Nil	Standard	None
A	90°	
B	180°	
C	270°	
D	Standard	With bracket*1
E	90°	
F	180°	
G	270°	

*1 Not available for the VXD2$^{3}_{A}$ (resin body type) and the VXD2$^{7}_{E}$ to VXD2$^{9}_{G}$.
*2 "Other options" (refer to page 20), which can be combined, are Nil, A, B, D, E, Z (Oil-free, G thread specifications, NPT thread specifications).
*3 Available for air and water.

Electrical entry direction

Symbol	VXD2$^{3}_{A}$ to VXD2$^{6}_{D}$	Symbol	VXD2$^{3}_{A}$ to VXD2$^{6}_{D}$
Nil · D	**Standard**	**A · E**	**90°** 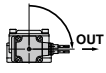
B · F	**180°** 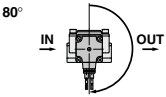	**C · G**	**270°** 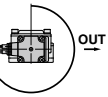

* Enter symbols in the order below when ordering a combination of electrical option, other option, seal material: EPDM, with bracket, mounting holes on the bottom side of the body and special electrical entry direction.

Example) **VXD2 3 2 A Z 1A Z X332 A**

- **Electrical option**
- **Other option**
- **Seal material: EPDM/ With bracket/ Special electrical entry direction**

Construction

Normally Closed (N.C.)

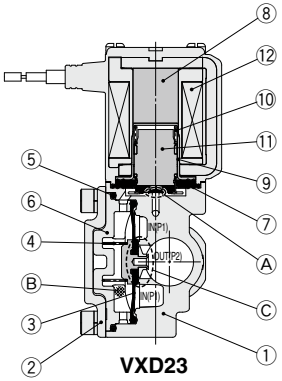

VXD23

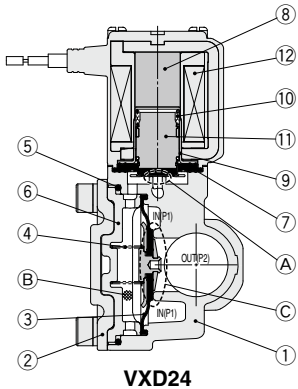

VXD24

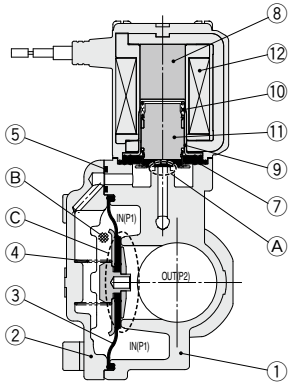

VXD25, 26

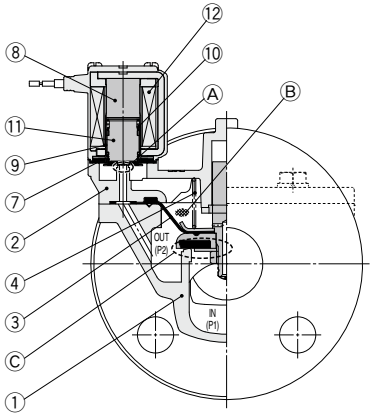

VXD27, 28, 29

Component Parts

No.	Description	Model	Material
1	**Body**	VXD23	C37, Stainless steel, Aluminum, Resin (PBT)
		VXD24 to 26	C37, Stainless steel
		VXD27 to 29	CAC408
2	**Bonnet**	VXD23, 24	Stainless steel
		VXD25, 26	C37, Stainless steel
		VXD27 to 29	CAC408
3	**Diaphragm assembly**	VXD23 to 29	Stainless steel, NBR, FKM, EPDM
4	**Spring**	VXD23 to 29	Stainless steel
5	**O-ring**	VXD23 to 26	NBR, FKM, EPDM
6	**Buffer**	VXD23, 24	PPS
7	**Stopper**	VXD23 to 29	NBR, FKM, EPDM
8	**Core**		Fe
9	**Tube**		Stainless steel
10	**Spring**		Stainless steel
11	**Armature assembly**		Stainless steel, NBR, FKM, EPDM, Resin (PPS)
12	**Solenoid coil**		Cu + Fe + Resin

Operation

<Valve open>

When coil ⑫ is energized, armature assembly ⑪ is attracted by core ⑧ and pilot valve Ⓐ is open.
When Ⓐ is open, the pressure in pressure chamber Ⓑ is reduced and main valve Ⓒ is open.

<Valve closed>

When coil ⑫ is de-energized, pilot valve Ⓐ is closed, pressure in pressure chamber Ⓑ increases, and main valve Ⓒ is closed.

Normally Open (N.O.)

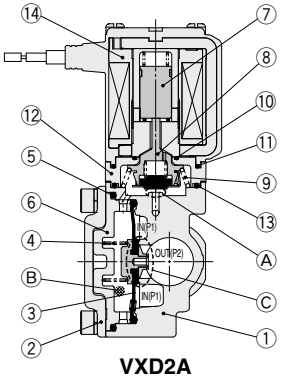

VXD2A

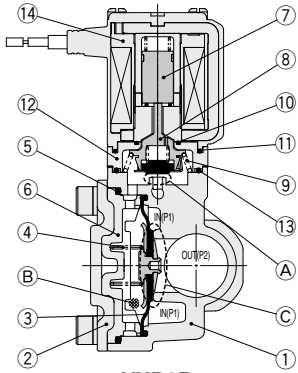

VXD2B

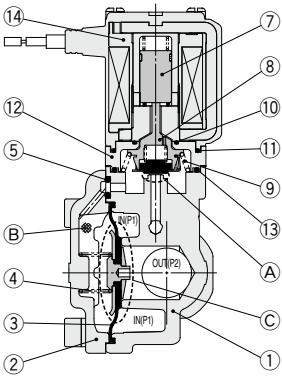

VXD2C, 2D

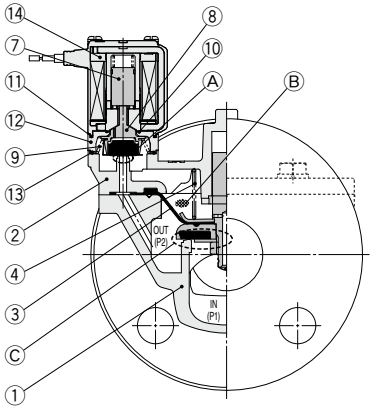

VXD2E, 2F, 2G

Component Parts

No.	Description	Model	Material
1	**Body**	VXD2A	C37, Stainless steel, Aluminum, Resin (PBT)
		VXD2B to 2D	C37, Stainless steel
		VXD2E to 2G	CAC408
2	**Bonnet**	VXD2A, 2B	Stainless steel
		VXD2C, 2D	C37, Stainless steel
		VXD2E to 2G	CAC408
3	**Diaphragm assembly**	VXD2A to 2G	Stainless steel, NBR, FKM, EPDM
4	**Spring**	VXD2A to 2G	Stainless steel
5	**O-ring**	VXD2A to 2D	NBR, FKM, EPDM
6	**Buffer**	VXD2A, 2B	PPS
7	**Sleeve assembly**	VXD2A to 2G	Stainless steel, Resin (PPS)
8	**Push rod assembly**		Resin (PPS), Stainless steel, NBR, FKM, EPDM
9	**Stopper**		Stainless steel
10	**O-ring A**		NBR, FKM, EPDM
11	**O-ring B**		NBR, FKM, EPDM
12	**Adapter**		Resin (PPS)
13	**O-ring C**		NBR, FKM, EPDM
14	**Solenoid coil**		Cu + Fe + Resin

Operation

<Valve closed>

When coil ⑭ is energized, (already open) pilot valve Ⓐ is closed, pressure in pressure chamber Ⓑ increases, and main valve Ⓒ is closed.

<Valve open>

When coil ⑭ is de-energized, (already closed) pilot valve Ⓐ is open, pressure in pressure chamber Ⓑ decreases, and main valve Ⓒ is open.

For Air

For information on handling One-touch fittings and on appropriate tubing, refer to page 167 and the Fittings & Tubing section of the "Handling Precautions for SMC Products" on the SMC website.

Dimensions/VXD2$^{3}_{A}$ Body Material: Resin (ø10, ø3/8", ø12)

Grommet

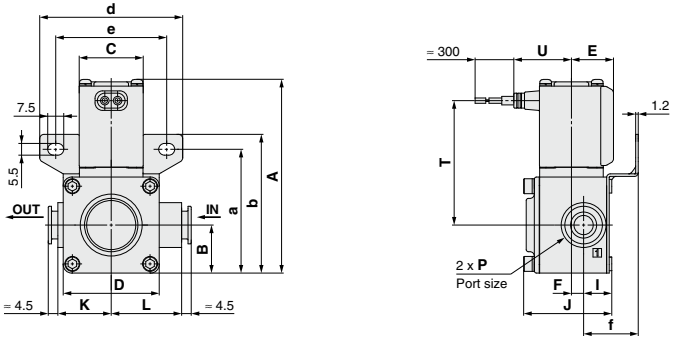

Grommet (with surge voltage suppressor)

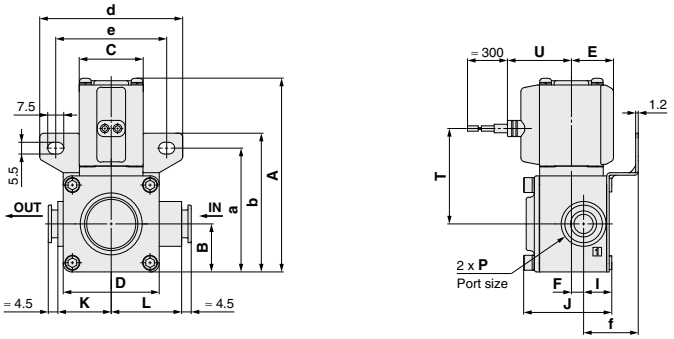

DIN terminal

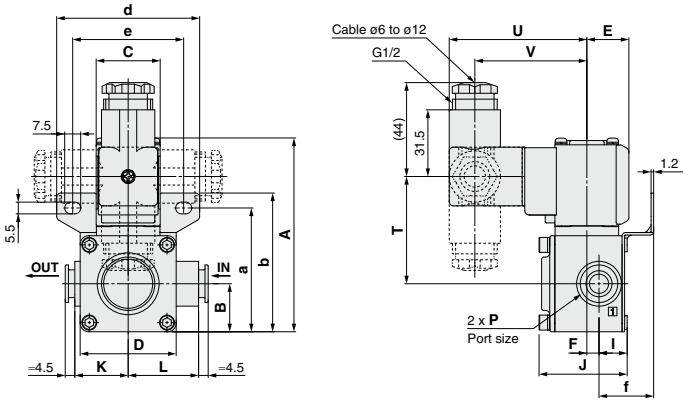

(mm)

Model	One-touch fitting P	A	B	C	D	E	F	I	J	K	L	Electrical entry						
												Grommet		Grommet (with surge voltage suppressor)		DIN terminal		
												T	U	T	U	T	U	V
VXD2$^{3}_{A}$	ø10, ø3/8", ø12	91 (97)	22.5	30	45	20	6	13.5	41.5	25	33	58.5 (64.5)	27	45 (50.5)	30	50.5 (56)	64.5	52.5

Model	One-touch fitting	Mounting bracket dimensions				
	P	a	b	d	e	f
VXD2$^{3}_{A}$	ø10, ø3/8", ø12	58	65	67	52	25.5

( ): Denotes the Normally Open (N.O.) dimensions.

Dimensions/VXD2$^{3}_{A}$ Body Material: Resin (ø10, ø3/8", ø12)

Conduit terminal

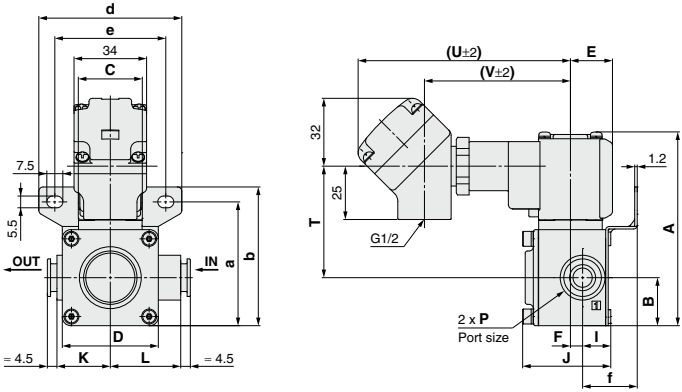

Conduit

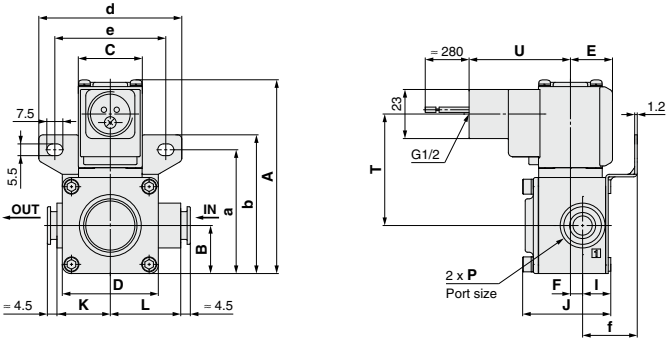

Flat terminal

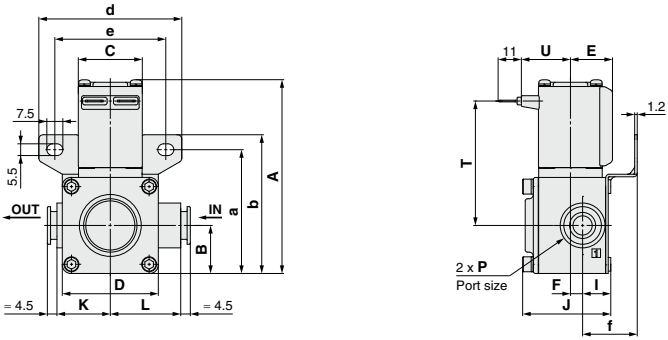

(mm)

Model	One-touch fitting P	A	B	C	D	E	F	I	J	K	L	Electrical entry						
												Conduit terminal			Conduit		Flat terminal	
												T	U	V	T	U	T	U
VXD2$^{3}_{A}$	ø10, ø3/8", ø12	91 (97)	22.5	30	45	20	6	13.5	41.5	25	33	52.5 (58)	99.5	68.5	52.5 (58)	47.5	58.5 (64.5)	23

Model	One-touch fitting P	Mounting bracket dimensions				
		a	b	d	e	f
VXD2$^{3}_{A}$	ø10, ø3/8", ø12	58	65	67	52	25.5

( ): Denotes the Normally Open (N.O.) dimensions.

Dimensions/VXD2$^{3}_{A}$ Body Material: Aluminum, C37, Stainless Steel

Grommet

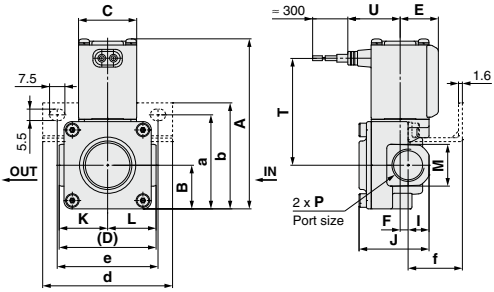

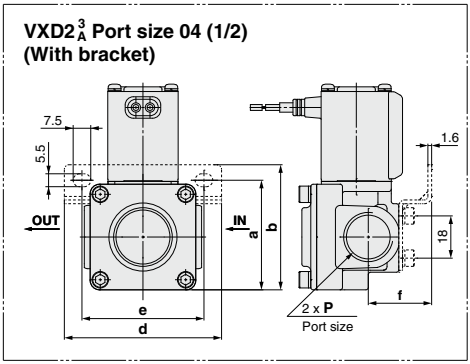

Grommet (with surge voltage suppressor)

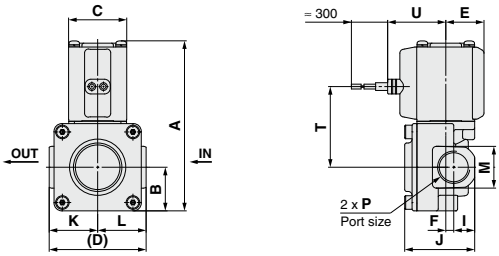

DIN terminal

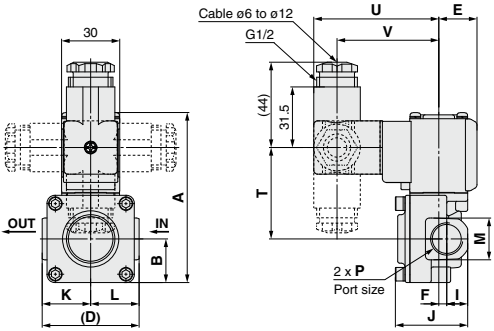

(mm)

Model	Port size P	A	B	C	D	E	F	I	J	K	L	M: C37, Stainless steel body	M: Aluminum body type	Electrical entry: Grommet T	Grommet U	Grommet (with surge voltage suppressor) T	Grommet (with surge voltage suppressor) U	DIN terminal T	DIN terminal U	DIN terminal V
VXD2$^{3}_{A}$	1/4, 3/8	88 (93.5)	22.5	30	50	20	4.5	11	37.5	25	25	22	24	55.5 (61)	27	42 (47.5)	30	47.5 (53)	64.5	52.5
	1/2						5	13	42.5			27	30							

Model	Port size P	Mounting bracket dimensions a	b	d	e	f
VXD2$^{3}_{A}$	1/4, 3/8	48.5	55	67	52	28
	1/2	47	53.5			27

( ): Denotes the Normally Open (N.O.) dimensions.
Aluminum body is for air. Refer to page 118 for details.

Dimensions/VXD2 $^{3}_{A}$ Body Material: Aluminum, C37, Stainless Steel

Conduit terminal

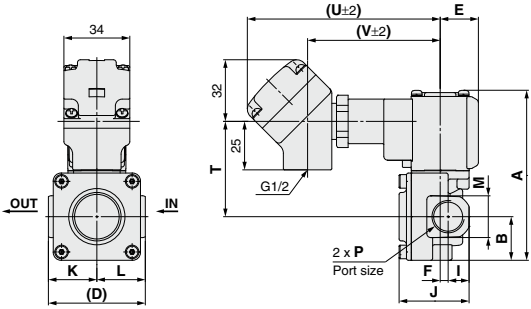

Conduit

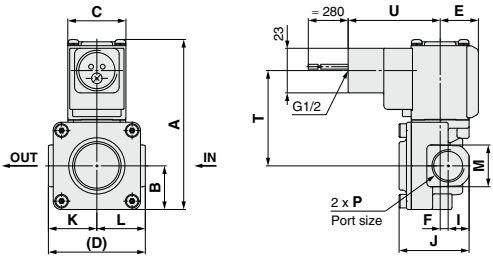

VXD2 $^{3}_{A}$ □ $^{C}_{F}$ □

Note) Only the VXD2 $^{3}_{A}$ with port size of 04 (1/2) has threads on the bottom of the body.

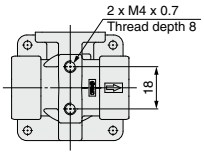

Flat terminal

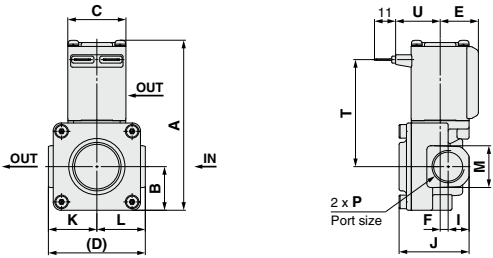

(mm)

Model	Port size P	A	B	C	D	E	F	I	J	K	L	M: C37, Stainless steel body	M: Aluminum body	Electrical entry: Conduit terminal T	Conduit terminal U	Conduit terminal V	Conduit T	Conduit U	Flat terminal T	Flat terminal U
VXD2 $^{3}_{A}$	1/4, 3/8	88 (93.5)	22.5	30	50	20	4.5	11	37.5	25	25	22	24	49.5 (55)	99.5	68.5	49.5 (55)	47.5	55.5 (61)	23
	1/2						5	13	42.5			27	30							

( ): Denotes the Normally Open (N.O.) dimensions.
Aluminum body is for air. Refer to page 118 for details.

For Air/Water/Oil

Dimensions/VXD2$^{4}_{B}$ Body Material: C37, Stainless Steel

Grommet

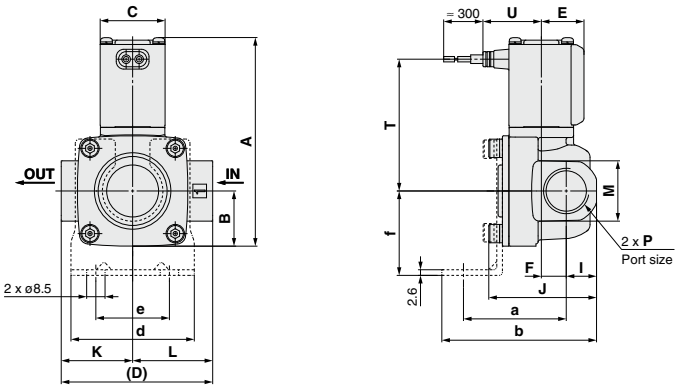

Grommet (with surge voltage suppressor)

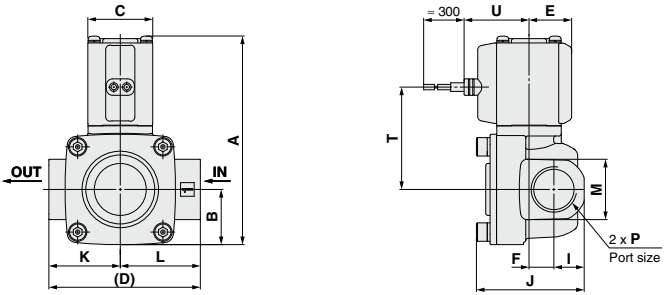

DIN terminal

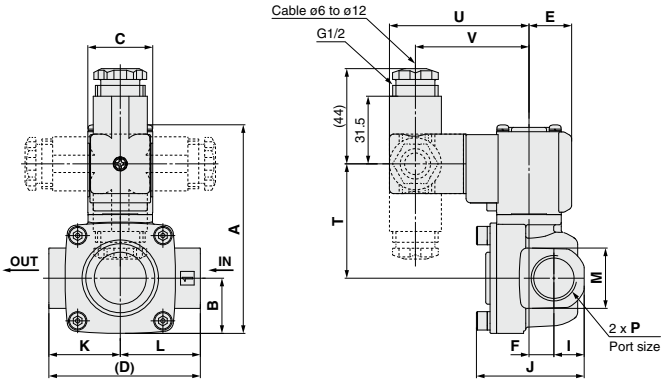

(mm)

Model	Port size P	A	B	C	D	E	F	I	J	K	L	M	Electrical entry: Grommet T	Grommet U	Grommet (with surge voltage suppressor) T	Grommet (with surge voltage suppressor) U	DIN terminal T	DIN terminal U	DIN terminal V
VXD2$^{4}_{B}$	3/8, 1/2	96.5 (102.5)	25.5	30	70	20	11.5	14	50	33	37	28	61 (67)	27	47.5 (53.5)	30	53 (59)	64.5	52.5

Model	Port size P	Mounting bracket dimensions a	b	d	e	f
VXD2$^{4}_{B}$	3/8, 1/2	47.5	71.5	57	34	39

( ): Denotes the Normally Open (N.O.) dimensions.

Dimensions/VXD2$^{4}_{B}$ Body Material: C37, Stainless Steel

Conduit terminal

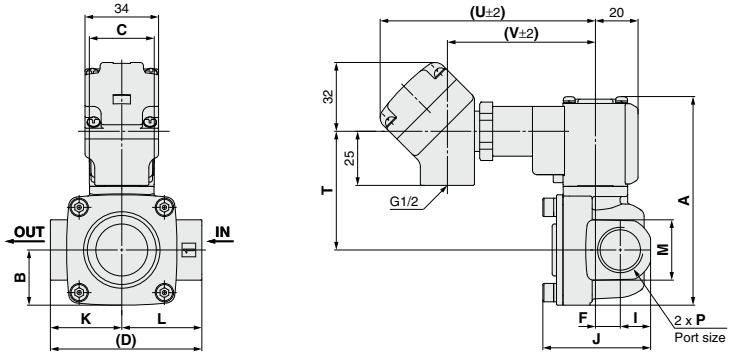

Conduit

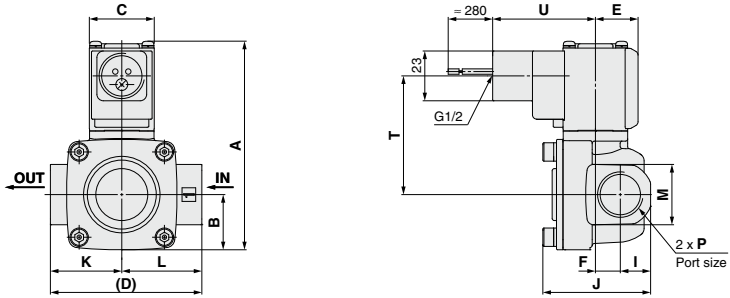

Flat terminal

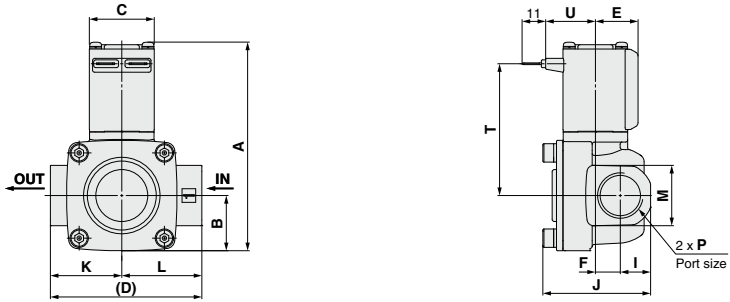

(mm)

Model	Port size P	A	B	C	D	E	F	I	J	K	L	M	Electrical entry						
													Conduit terminal			Conduit		Flat terminal	
													T	U	V	T	U	T	U
VXD2$^{4}_{B}$	3/8, 1/2	96.5 (102.5)	25.5	30	70	20	11.5	14	50	33	37	28	55 (61)	99.5	68.5	55 (61)	47.5	61 (67)	23

( ): Denotes the Normally Open (N.O.) dimensions.

For Air/Water/Oil

Dimensions/VXD2$^{5}_{C}$/2$^{6}_{D}$ Body Material: C37, Stainless Steel

Grommet

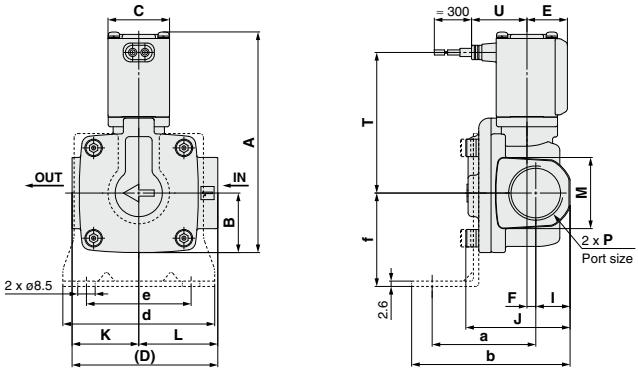

Grommet (with surge voltage suppressor)

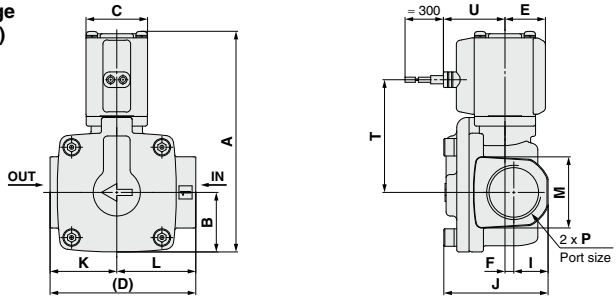

DIN terminal

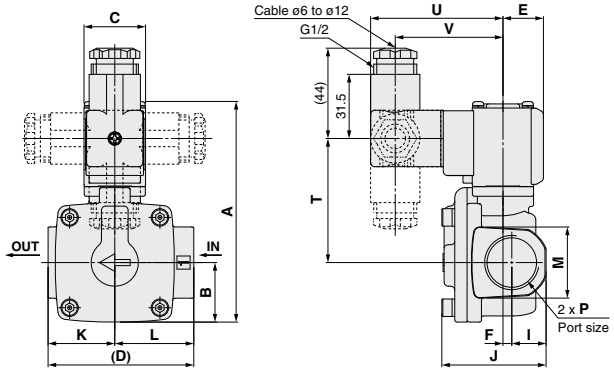

(mm)

Model	Port size P	A	B	C	D	E	F	I	J	K	L	M	Electrical entry						
													Grommet		Grommet (with surge voltage suppressor)		DIN terminal		
													T	U	T	U	T	U	V
VXD2$^{5}_{C}$	3/4	107.5 (113.5)	29	30	71	20	4.5	17	51	32.5	38.5	35	68.5 (74.5)	27	55 (61)	30	60.5 (66.5)	64.5	52.5
VXD2$^{6}_{D}$	1	126.5 (134.5)	33	35	95	22	4.5	20	59.5	45.5	49.5	42	82.5 (90.5)	29.5	69 (77)	32.5	74.5 (82.5)	67	55

Model	Port size P	Mounting bracket dimensions				
		a	b	d	e	f
VXD2$^{5}_{C}$	3/4	50.5	77.5	74	51	45.5
VXD2$^{6}_{D}$	1	55.5	85.5	81	58	49.5

( ): Denotes the Normally Open (N.O.) dimensions.

Dimensions/VXD2$^{5}_{C}$/2$^{6}_{D}$ Body Material: C37, Stainless Steel

Conduit terminal

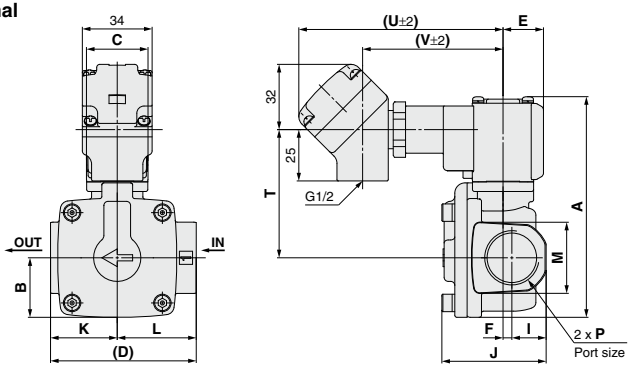

Conduit

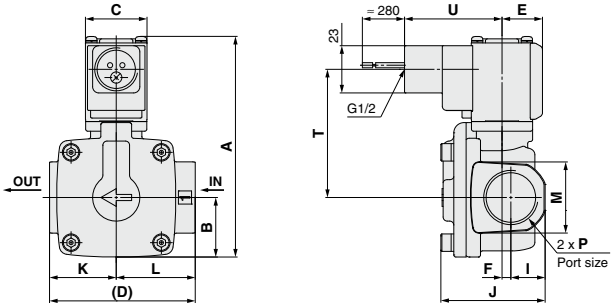

Flat terminal

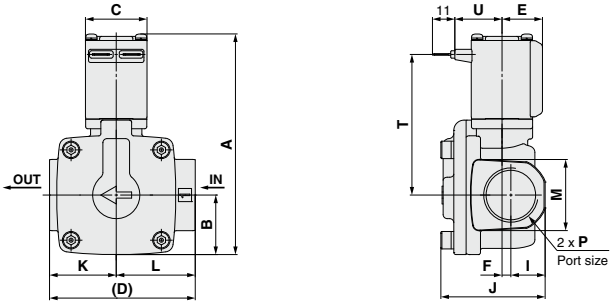

(mm)

Model	Port size P	A	B	C	D	E	F	I	J	K	L	M	Electrical entry						
													Conduit terminal			Conduit		Flat terminal	
													T	U	V	T	U	T	U
VXD2$^{5}_{C}$	3/4	107.5 (113.5)	29	30	71	20	4.5	17	51	32.5	38.5	35	62.5 (68.5)	99.5	68.5	62.5 (68.5)	47.5	68.5 (74.5)	23
VXD2$^{6}_{D}$	1	126.5 (134.5)	33	35	95	22	4.5	20	59.5	45.5	49.5	42	76.5 (84.5)	102	71	76.5 (84.5)	50	82.5 (90.5)	25.5

Model	Port size P	Mounting bracket dimensions				
		a	b	d	e	f
VXD2$^{5}_{C}$	3/4	50.5	77.5	74	51	45.5
VXD2$^{6}_{D}$	1	55.5	85.5	81	58	49.5

( ): Denotes the Normally Open (N.O.) dimensions.

For Air/Water/Oil

Dimensions/VXD2$^{7}_{E}$/2$^{8}_{F}$/2$^{9}_{G}$ Body Material: CAC408

Grommet

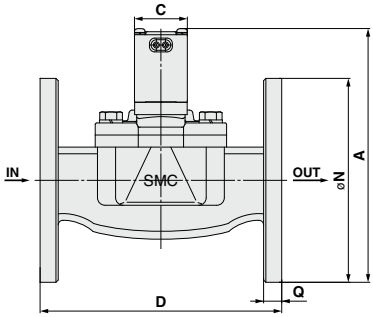

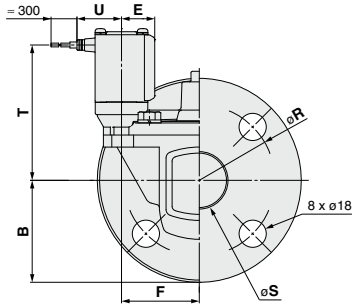

Grommet (with surge voltage suppressor)

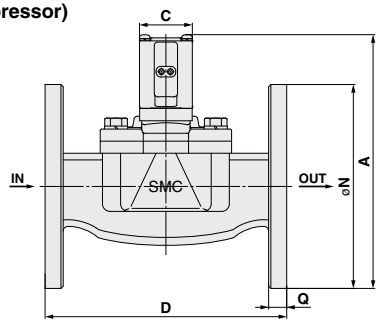

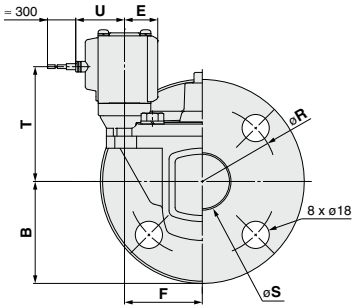

DIN terminal

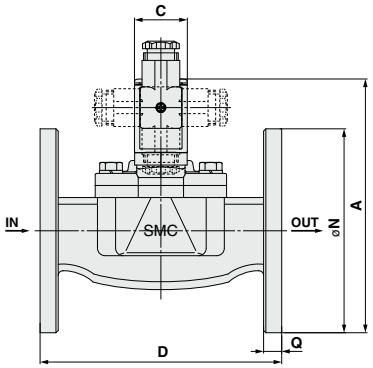

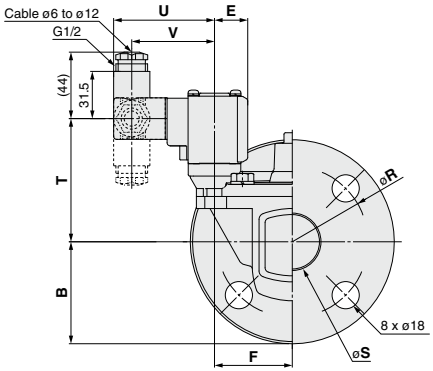

(mm)

Model	Applicable flange	A	B	C	D	E	F	N	Q	R	S	Electrical entry						
												Grommet		Grommet (with surge voltage suppressor)		DIN terminal		
												T	U	T	U	T	U	V
VXD2$^{7}_{E}$	32A	168 (176)	67.5	35	160	22	51.5	135	12	100	36	90 (98)	29.5	76 (84)	32.5	82 (90)	67	55
VXD2$^{8}_{F}$	40A	179.5 (187.5)	70	40	170	24.5	54.5	140	14	105	42	98.5 (106.5)	32	85 (93)	35	90.5 (98.5)	69.5	57.5
VXD2$^{9}_{G}$	50A	192.5 (200.5)	77.5	40	180	24.5	59	155	14	120	52	104 (112)	32	90.5 (98.5)	35	96 (104)	69.5	57.5

( ): Denotes the Normally Open (N.O.) dimensions.

Dimensions/VXD2$^{7}_{E}$/2$^{8}_{F}$/2$^{9}_{G}$ Body Material: CAC408

Conduit terminal

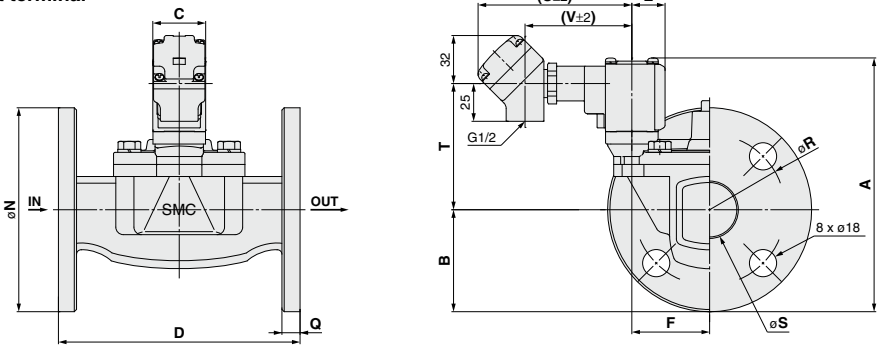

Conduit

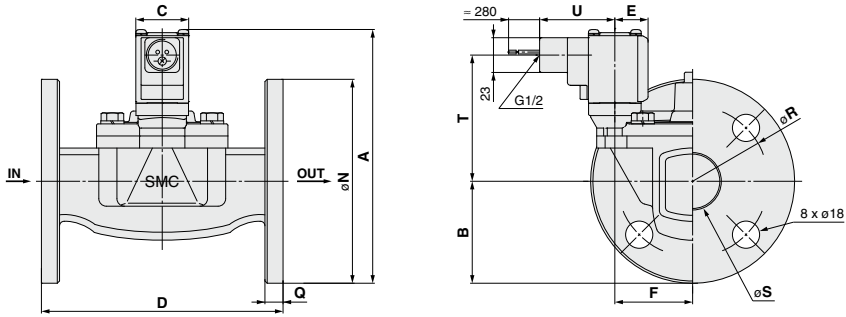

Flat terminal

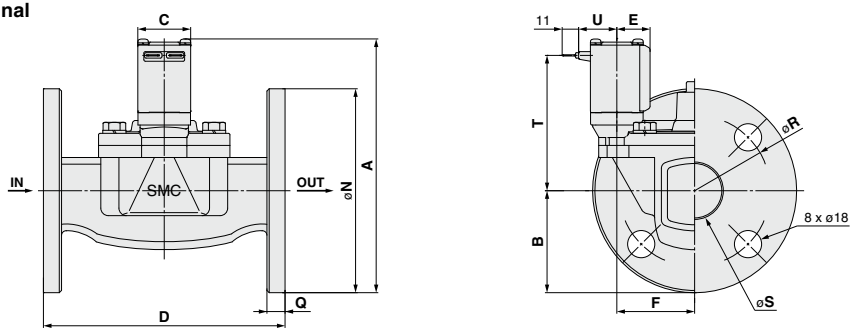

(mm)

Model	Applicable flange	A	B	C	D	E	F	N	Q	R	S	Electrical entry						
												Conduit terminal			Conduit		Flat terminal	
												T	U	V	T	U	T	U
VXD2$^{7}_{E}$	32A	168 (176)	67.5	35	160	22	51.5	135	12	100	36	84 (92)	102	71	84 (92)	50	90 (98)	25.5
VXD2$^{8}_{F}$	40A	179.5 (187.5)	70	40	170	24.5	54.5	140	14	105	42	92.5 (100.5)	104.5	73.5	92.5 (100.5)	52.5	98.5 (106.5)	28
VXD2$^{9}_{G}$	50A	192.5 (200.5)	77.5	40	180	24.5	59	155	14	120	52	98 (106)	104.5	73.5	98 (106)	52.5	104 (112)	28

( ): Denotes the Normally Open (N.O.) dimensions.

For Heated water/High temperature oil

Dimensions/VXD2$^{3}_{A}$ Body Material: C37, Stainless Steel (1/4, 3/8, 1/2)

Grommet

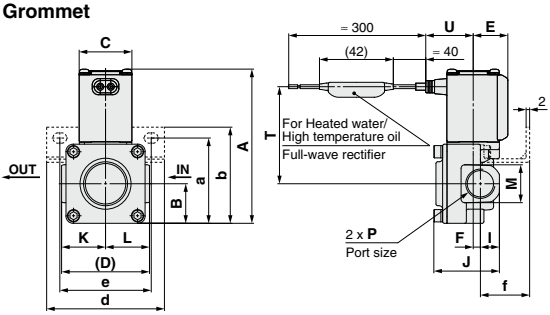

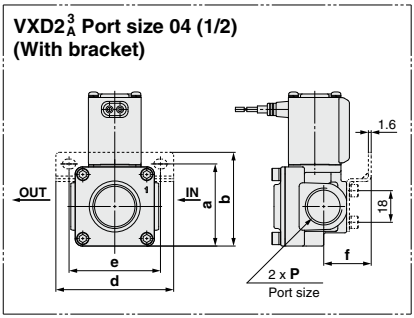

Conduit terminal

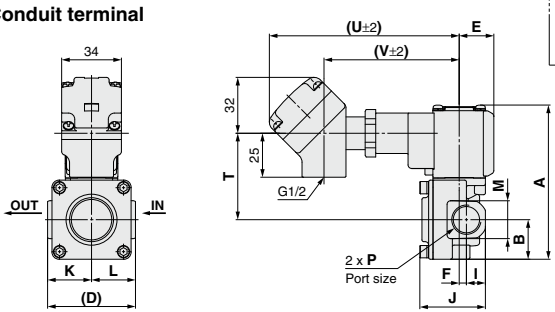

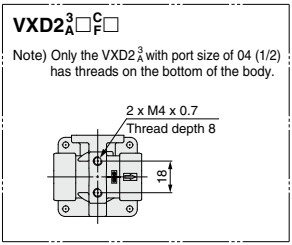

Conduit

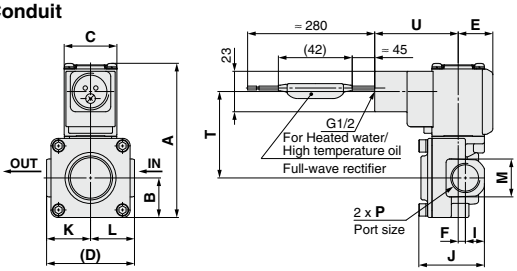

(mm)

Model	Port size P	A	B	C	D	E	F	I	J	K	L	M	Electrical entry						
													Grommet		Conduit terminal			Conduit	
													T	U	T	U	V	T	U
VXD2$^{3}_{A}$	1/4, 3/8	88 (93.5)	22.5	30	50	20	4.5	11	37.5	25	25	22	55.5 (61)	27	49.5 (55)	108	77	49.5 (55)	47.5
	1/2						5	13	42.5			27							

Model	Port size P	Mounting bracket dimensions				
		a	b	d	e	f
VXD2$^{3}_{A}$	1/4, 3/8	48.5	55	67	52	28
	1/2	47	53.5			27

( ): Denotes the Normally Open (N.O.) dimensions.

Dimensions/VXD2$^{4}_{B}$ Body Material: C37, Stainless Steel

Grommet

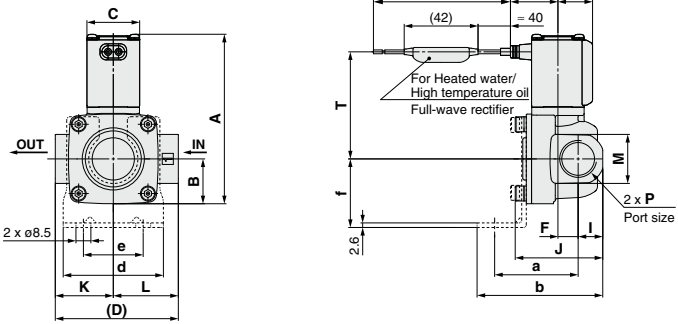

DIN terminal

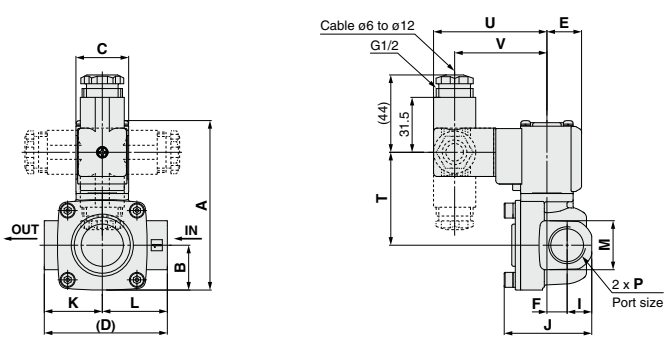

(mm)

Model	Port size P	A	B	C	D	E	F	I	J	K	L	M	Electrical entry				
													Grommet		DIN terminal		
													T	U	T	U	V
VXD2$^{4}_{B}$	3/8, 1/2	96.5 (102.5)	25.5	30	70	20	11.5	14	50	33	37	28	61 (67)	27	53 (59)	64.5	52.5

Model	Port size P	Mounting bracket dimensions				
		a	b	d	e	f
VXD2$^{4}_{B}$	3/8, 1/2	47.5	71.5	57	34	39

( ): Denotes the Normally Open (N.O.) dimensions.

For Heated water/High temperature oil

Dimensions/VXD2$^{4}_{B}$ Body Material: C37, Stainless Steel

Conduit terminal

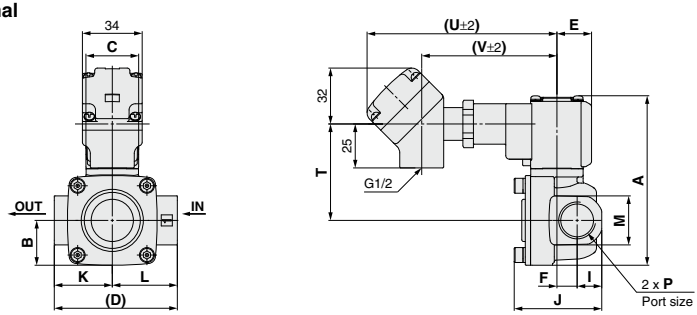

Conduit

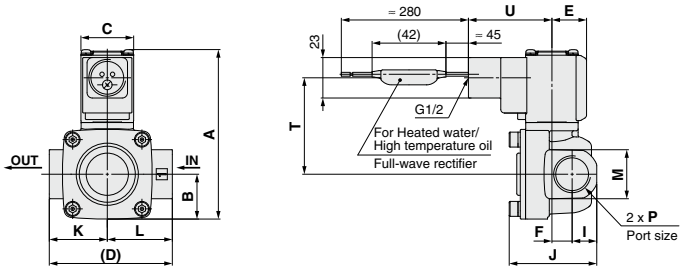

(mm)

Model	Port size P	A	B	C	D	E	F	I	J	K	L	M	Electrical entry				
													Conduit terminal			Conduit	
													T	U	V	T	U
VXD2$^{4}_{B}$	3/8, 1/2	96.5 (102.5)	25.5	30	70	20	11.5	14	50	33	37	28	55 (61)	108	77	55 (61)	47.5

( ): Denotes the Normally Open (N.O.) dimensions.

Heated water High temperature oil

Dimensions/VXD2$^{5}_{C}$/2$^{6}_{D}$ Body Material: C37, Stainless Steel

Grommet

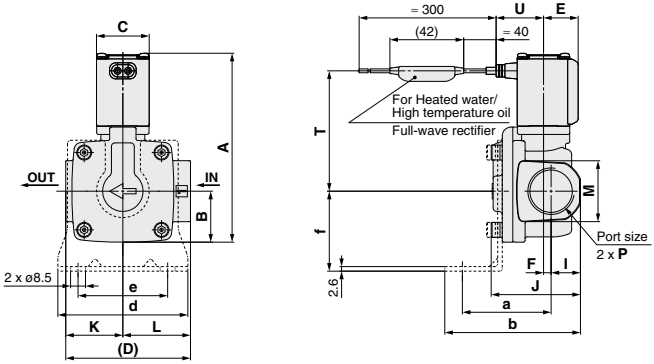

DIN terminal

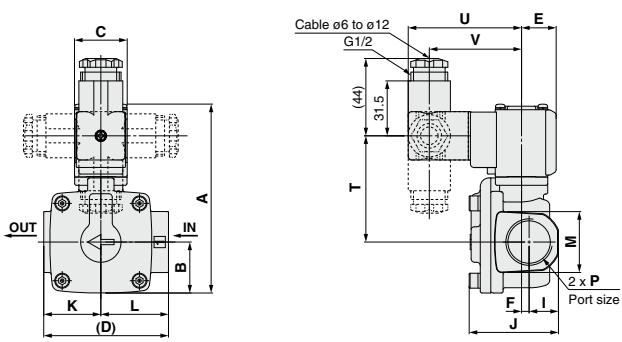

(mm)

Model	Port size P	A	B	C	D	E	F	I	J	K	L	M	Electrical entry				
													Grommet		DIN terminal		
													T	U	T	U	V
VXD2$^{5}_{C}$	3/4	107.5 (113.5)	29	30	71	20	4.5	17	51	32.5	38.5	35	68.5 (74.5)	27	60.5 (66.5)	64.5	52.5
VXD2$^{6}_{D}$	1	126.5 (134.5)	33	35	95	22	4.5	20	59.5	45.5	49.5	42	82.5 (90.5)	29.5	74.5 (82.5)	67	55

Model	Port size P	Mounting bracket dimensions				
		a	b	d	e	f
VXD2$^{5}_{C}$	3/4	50.5	77.5	74	51	45.5
VXD2$^{6}_{D}$	1	55.5	85.5	81	58	49.5

( ): Denotes the Normally Open (N.O.) dimensions.

For Heated water/High temperature oil

Dimensions/VXD2$^{5}_{C}$/2$^{6}_{D}$ Body Material: C37, Stainless Steel

Conduit terminal

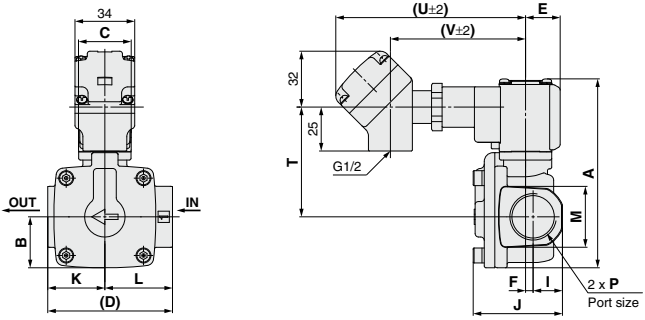

Conduit

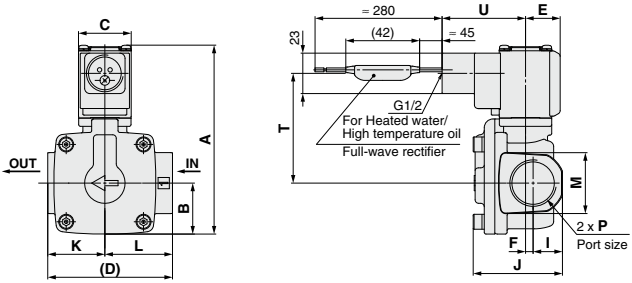

(mm)

Model	Port size P	A	B	C	D	E	F	I	J	K	L	M	Electrical entry				
													Conduit terminal			Conduit	
													T	U	V	T	U
VXD2$^{5}_{C}$	3/4	107.5 (113.5)	29	30	71	20	4.5	17	51	32.5	38.5	35	62.5 (68.5)	108	77	62.5 (68.5)	47.5
VXD2$^{6}_{D}$	1	126.5 (134.5)	33	35	95	22	4.5	20	59.5	45.5	49.5	42	76.5 (84.5)	110.5	79.5	76.5 (84.5)	50

( ): Denotes the Normally Open (N.O.) dimensions.

Heated water High temperature oil

Dimensions/VXD2$^{7}_{E}$/2$^{8}_{F}$/2$^{9}_{G}$ Body Material: CAC408

Grommet

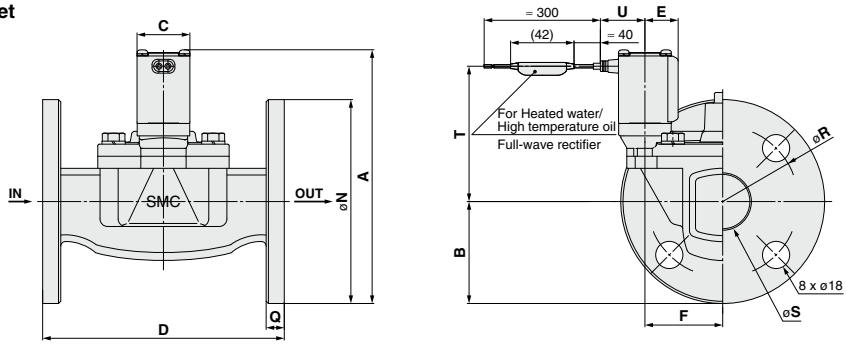

DIN terminal

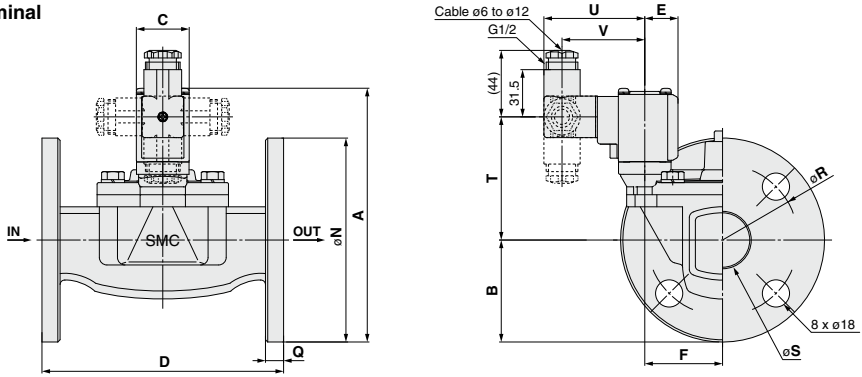

(mm)

Model	Applicable flange	A	B	C	D	E	F	N	Q	R	S	Electrical entry				
												Grommet		DIN terminal		
												T	U	T	U	V
VXD2$^{7}_{E}$	32A	168 (176)	67.5	35	160	22	51.5	135	12	100	36	90 (98)	29.5	82 (90)	67	55
VXD2$^{8}_{F}$	40A	179.5 (187.5)	70	40	170	24.5	54.5	140	14	105	42	98.5 (106.5)	32	90.5 (98.5)	69.5	57.5
VXD2$^{9}_{G}$	50A	192.5 (200.5)	77.5	40	180	24.5	59	155	14	120	52	104 (112)	32	96 (104)	69.5	57.5

( ): Denotes the Normally Open (N.O.) dimensions.

For Heated water/High temperature oil

Dimensions/VXD2$^{7}_{E}$/2$^{8}_{F}$/2$^{9}_{G}$ Body Material: CAC408

Conduit terminal

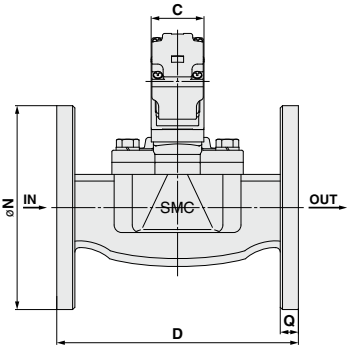

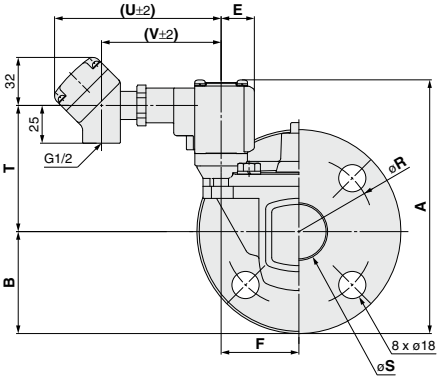

Conduit

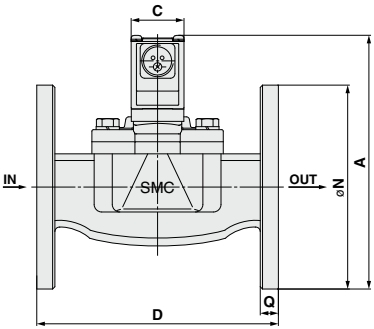

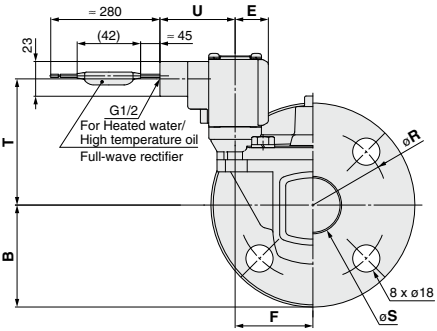

(mm)

Model	Applicable flange	A	B	C	D	E	F	N	Q	R	S	Electrical entry				
												Conduit terminal			Conduit	
												T	U	V	T	U
VXD2$^{7}_{E}$	32A	168 (176)	67.5	35	160	22	51.5	135	12	100	36	84 (92)	110.5	79.5	84 (92)	50
VXD2$^{8}_{F}$	40A	179.5 (187.5)	70	40	170	24.5	54.5	140	14	105	42	92.5 (100.5)	113	82	92.5 (100.5)	52.5
VXD2$^{9}_{G}$	50A	192.5 (200.5)	77.5	40	180	24.5	59	155	14	120	52	98 (106)	113	82	98 (106)	52.5

( ): Denotes the Normally Open (N.O.) dimensions.

Replacement Parts

- **DIN Connector Part No.**

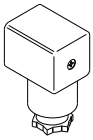

<Coil Insulation Type/Class B>

Electrical option	Rated voltage	Connector part no.
None	24 VDC	**GDM2A-G**
	12 VDC	
	100 VAC	
	110 VAC	
	200 VAC	
	220 VAC	
	230 VAC	
	240 VAC	
	24 VAC	
	48 VAC	
With light	24 VDC	**GDM2A-L5**
	12 VDC	**GDM2A-L6**
	100 VAC	**GDM2A-L1**
	110 VAC	**GDM2A-L1**
	200 VAC	**GDM2A-L2**
	220 VAC	**GDM2A-L2**
	230 VAC	**GDM2A-L2**
	240 VAC	**GDM2A-L2**
	24 VAC	**GDM2A-L5**
	48 VAC	**GDM2A-L15**

<Coil Insulation Type/Class H>

Electrical option	Rated voltage	Connector part no.
None	24 VDC	**GDM2A-G-S5**
	100 VAC	**GDM2A-R**
	110 VAC	
	200 VAC	
	220 VAC	
	230 VAC	
	240 VAC	
	24 VAC	
	48 VAC	
With light	24 VDC	**GDM2A-G-Z5**
	100 VAC	**GDM2A-R-L1**
	110 VAC	**GDM2A-R-L1**
	200 VAC	**GDM2A-R-L2**
	220 VAC	**GDM2A-R-L2**
	230 VAC	**GDM2A-R-L2**
	240 VAC	**GDM2A-R-L2**
	24 VAC	**GDM2A-R-L5**
	48 VAC	**GDM2A-R-L5**

- **Gasket Part No. for DIN Connector**

VCW20-1-29-1 (for Class B)
VCW20-1-29-1-F (for Class H)

- **Lead Wire Assembly Part No. for Flat Terminal (Set of 2 pcs.)**

VX021S-1-16FB

- **Bracket Assembly Part No. for the VXD2 $\frac{3}{A}$ Metal Body (C37, Stainless steel, Aluminum)**

Port size: For 1/4, 3/8 **VXD30S-14A-1**

Port size: For 1/2 **VXD30S-14A-3**

∗ 2 mounting screws (M4 hexagon socket head cap screws) are shipped together with the bracket assembly, but not assembled.

VXD Series
Glossary of Terms

Pressure Terminology

1. Maximum operating pressure differential

The maximum pressure differential (the difference between the inlet and outlet pressure) which is allowed for operation. When the outlet pressure is 0 MPa, this becomes the maximum operating pressure.

2. Minimum operating pressure differential

The minimum pressure differential (the difference between the inlet pressure and outlet pressure) required to keep the main valve fully open.

3. Maximum system pressure

The maximum pressure that can be applied inside the pipelines (line pressure).
[The pressure differential in the solenoid valve portion must be below the maximum operating pressure differential.]

4. Withstand pressure

The pressure in which the valve must be withstood without a drop in performance after holding for one minute under prescribed (static) pressure and returning to the operating pressure range. [value under the prescribed conditions]

Electrical Terminology

1. Apparent power (VA)

Volt-ampere is the product of voltage (V) and current (A).
Power consumption (W): For AC, $W = V \cdot A \cdot \cos\theta$.
For DC, $W = V \cdot A$.
Note) $\cos\theta$ shows power factor. $\cos\theta \approx 0.9$

2. Surge voltage

A high voltage which is momentarily generated by shutting off the power in the shut-off area.

3. Enclosure

A degree of protection defined in the "JIS C 0920: Waterproof test of electric machinery/appliance and the degree of protection against the intrusion of solid foreign objects."

Verify the degree of protection for each product.

● **First Characteristics:**
Degrees of protection against solid foreign objects

0	Non-protected
1	Protected against solid foreign objects of 50 mmø and greater
2	Protected against solid foreign objects of 12 mmø and greater
3	Protected against solid foreign objects of 2.5 mmø and greater
4	Protected against solid foreign objects of 1.0 mmø and greater
5	Dust-protected
6	Dust-tight

Electrical Terminology

● **Second Characteristics:**
Degrees of protection against water

0	Non-protected	—
1	Protected against vertically falling water drops	Dripproof type 1
2	Protected against vertically falling water drops when enclosure tilted up to 15°	Dripproof type 2
3	Protected against rainfall when enclosure tilted up to 60°	Rainproof type
4	Protected against splashing water	Splashproof type
5	Protected against water jets	Water-jet-proof type
6	Protected against powerful water jets	Powerful water-jet-proof type
7	Protected against the effects of temporary immersion in water	Immersible type
8	Protected against the effects of continuous immersion in water	Submersible type

Example) IP65: Dust-tight, Water-jet-proof type
"Water-jet-proof type" means that no water intrudes inside an equipment that could hinder from operating normally by means of applying water for 3 minutes in the prescribed manner. Take appropriate protection measures, since a device is not usable in an environment where a droplet of water is splashed constantly.

Others

1. Material

NBR: Nitrile rubber
FKM: Fluororubber
EPDM: Ethylene-propylene rubber

2. Oil-free treatment

The degreasing and washing of wetted parts

3. Symbol

In the symbol ( ) Port 1 (IN) and Port 2 (OUT) are shown in a blocked condition ( ), but it is not possible to use the valve in cases of reverse pressure, where the Port 2 pressure is higher than the Port 1 pressure.

Flat Terminal

1. Flat terminal/Electrical connection size of molded coil

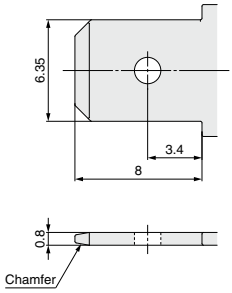

Solenoid Valve Flow Rate Characteristics
(How to indicate flow rate characteristics)

1. Indication of flow rate characteristics

The flow rate characteristics in equipment such as a solenoid valve, etc. are indicated in their specifications as shown in Table (1).

Table (1) Indication of Flow Rate Characteristics

Corresponding equipment	Indication by international standard	Other indications	Conformed standard
Pneumatic equipment	*C*, *b*	—	ISO 6358: 1989 JIS B 8390: 2000
	—	*S*	JIS B 8390: 2000 Equipment: JIS B 8379, 8381-1, 8381-2
		Cv	ANSI/(NFPA)T3.21.3 R1-2008
Process fluid control equipment	*Kv*	—	IEC60534-1: 2005 IEC60534-2-3: 1997 JIS B 2005-1: 2012 JIS B 2005-2-3: 2004 Equipment: JIS B 8471, 8472, 8473
	—	*Cv*	

2. Pneumatic equipment

2.1 Indication according to the international standards

(1) Conformed standard

ISO 6358: 1989 : Pneumatic fluid power—Components using compressible fluids—Determination of flow rate characteristics

JIS B 8390: 2000 : Pneumatic fluid power—Components using compressible fluids—How to test flow rate characteristics

(2) Definition of flow rate characteristics

The flow rate characteristics are indicated as a result of a comparison between sonic conductance ***C*** and critical pressure ratio ***b***.

Sonic conductance ***C*** : Value which divides the passing mass flow rate of an equipment in a choked flow condition by the product of the upstream absolute pressure and the density in a standard condition.

Critical pressure ratio ***b*** : Pressure ratio (downstream pressure/upstream pressure) which will turn to a choked flow when the value is smaller than this ratio.

Choked flow : The flow in which the upstream pressure is higher than the downstream pressure and where sonic speed in a certain part of an equipment is reached.
Gaseous mass flow rate is in proportion to the upstream pressure and not dependent on the downstream pressure.

Subsonic flow : Flow greater than the critical pressure ratio

Standard condition : Air in a temperature state of 20°C, absolute pressure 0.1 MPa (= 100 kPa = 1 bar), relative humidity 65%.
It is stipulated by adding the "(ANR)" after the unit depicting air volume.
(standard reference atmosphere)
Conformed standard: ISO 8778: 1990 Pneumatic fluid power—Standard reference atmosphere, JIS B 8393: 2000: Pneumatic fluid power—Standard reference atmosphere

(3) Formula for flow rate

It is described by the practical units as following.

When

$$\frac{P_2 + 0.1}{P_1 + 0.1} \leq b, \text{ choked flow}$$

$$Q = 600 \times C\,(P_1 + 0.1)\sqrt{\frac{293}{273 + T}} \quad \cdots\cdots (1)$$

When

$$\frac{P_2 + 0.1}{P_1 + 0.1} > b, \text{ subsonic flow}$$

$$Q = 600 \times C\,(P_1 + 0.1)\sqrt{1 - \left[\frac{\frac{P_2 + 0.1}{P_1 + 0.1} - b}{1 - b}\right]^2}\sqrt{\frac{293}{273 + T}} \quad \cdots\cdots (2)$$

Q : Air flow rate [L/min (ANR)]
C : Sonic conductance [dm³/(s·bar)], dm³ (Cubic decimeter) of SI = L (liter).
b : Critical pressure ratio [—]
P_1 : Upstream pressure [MPa]
P_2 : Downstream pressure [MPa]
T : Temperature [°C]
Note) Formula of subsonic flow is the elliptic analogous curve.
Flow rate characteristics are shown in Graph (1) For details, please use the calculation software available from SMC website.

Example)
Obtain the air flow rate for P_1 = 0.4 [MPa], P_2 = 0.3 [MPa], ***T*** = 20 [°C] when a solenoid valve is performed in ***C*** = 2 [dm³/(s·bar)] and ***b*** = 0.3.

According to formula 1, the maximum flow rate = 600 x 2 x (0.4 + 0.1) x $\sqrt{\dfrac{293}{273 + 20}}$ = 600 [L/min (ANR)]

Pressure ratio = $\dfrac{0.3 + 0.1}{0.4 + 0.1}$ = 0.8

Based on Graph (1), it is going to be 0.7 if it is read by the pressure ratio as 0.8 and the flow ratio to be ***b*** = 0.3.
Hence, flow rate = Max. flow x flow ratio = 600 x 0.7 = 420 [L/min (ANR)]

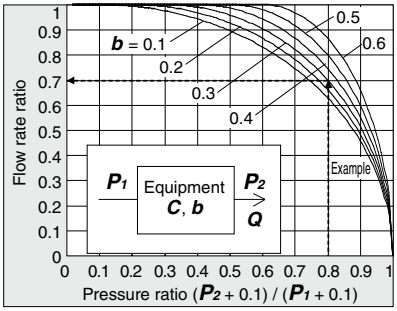

Graph (1) Flow rate characteristics

(4) Test method

Attach a test equipment with the test circuit shown in Fig. (1) while maintaining the upstream pressure to a certain level which does not go below 0.3 MPa. Next, measure the maximum flow to be saturated in the first place, then measure this flow rate at 80%, 60%, 40%, 20% and the upstream and downstream pressure. And then, obtain the sonic conductance ***C*** from this maximum flow rate. In addition, calculate ***b*** using each data of others and the subsonic flow formula, and then obtain the critical pressure ratio ***b*** from that average.

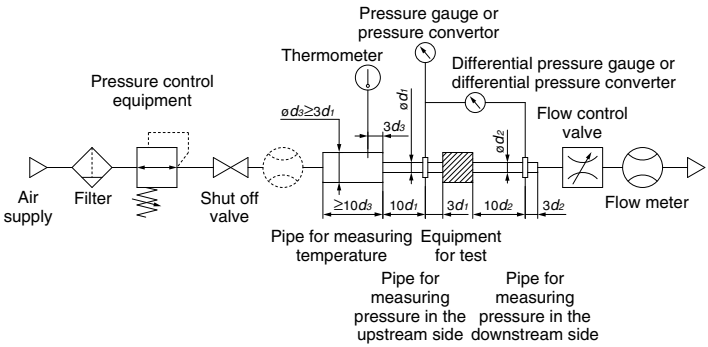

Fig. (1) Test circuit based on ISO 6358: 1989, JIS B 8390: 2000

2.2 Effective area *S*

(1) Conformed standard

JIS B 8390: 2000: Pneumatic fluid power—Components using compressible fluids—Determination of flow rate characteristics

Equipment standards: JIS B 8373: Solenoid valve for pneumatics
JIS B 8379: Silencer for pneumatics
JIS B 8381-1: Fittings for pneumatics—Part 1: Push-in fittings for thermoplastic resin tubing
JIS B 8381-2: Fittings for pneumatics—Part 2: Compression fittings for thermoplastic resin tubing

(2) Definition of flow rate characteristics

Effective area ***S***: The cross-sectional area having an ideal throttle without friction deduced from the calculation of the pressure changes inside an air tank or without reduced flow when discharging the compressed air in a choked flow, from an equipment attached to the air tank. This is the same concept representing the "easy to run through" as sonic conductance ***C***.

(3) Formula for flow rate

When

$\frac{P_2 + 0.1}{P_1 + 0.1}$ 0.5, **choked flow**

$$Q = 120 \times S\,(P_1 + 0.1)\sqrt{\frac{293}{273 + T}} \quad \cdots\cdots (3)$$

When

$\frac{P_2 + 0.1}{P_1 + 0.1} > 0.5$, **subsonic flow**

$$Q = 240 \times S\,\sqrt{(P_2 + 0.1)\,(P_1 - P_2)}\sqrt{\frac{293}{273 + T}} \quad \cdots\cdots (4)$$

Conversion with sonic conductance ***C***:

$$S = 5.0 \times C \quad \cdots\cdots (5)$$

Q : Air flow rate[L/min(ANR)]
S : Effective area [mm²]
P_1 : Upstream pressure [MPa]
P_2 : Downstream pressure [MPa]
T : Temperature [°C]

Note) Formula for subsonic flow (4) is only applicable when the critical pressure ratio ***b*** is the unknown equipment. In the formula (2) by the sonic conductance ***C***, it is the same formula as when ***b*** = 0.5.

(4) Test method

Attach a test equipment with the test circuit shown in Fig. (2) in order to discharge air into the atmosphere until the pressure inside the air tank goes down to 0.25 MPa (0.2 MPa) from an air tank filled with the compressed air at a certain pressure level (0.5 MPa) which does not go below 0.6 MPa. At this time, measure the discharging time and the residual pressure inside the air tank which had been left until it turned to be the normal values to determine the effective area ***S***, using the following formula. The volume of an air tank should be selected within the specified range by corresponding to the effective area of an equipment for test. In the case of JIS B 8379, the pressure values are in parentheses and the coefficient of the formula is 12.9.

$$S = 12.1\,\frac{V}{t}\,\log_{10}\left(\frac{P_s + 0.1}{P + 0.1}\right)\sqrt{\frac{293}{T}} \quad \cdots\cdots (6)$$

S : Effective area [mm²]
V : Air tank capacity [L]
t : Discharging time [s]
P_s : Pressure inside air tank before discharging [MPa]
P : Residual pressure inside air tank after discharging [MPa]
T : Temperature inside air tank before discharging [K]

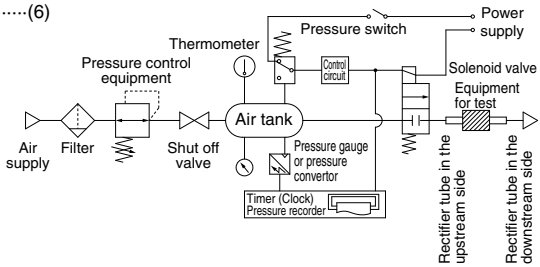

Fig. (2) Test circuit based on JIS B 8390: 2000

2.3 Flow coefficient *Cv* factor

The United States Standard ANSI/(NFPA)T3.21.3: R1-2008R: Pneumatic fluid power—Flow rating test procedure and reporting method for fixed orifice components

This standard defines the ***Cv*** factor of the flow coefficient by the following formula that is based on the test conducted by the test circuit analogous to ISO 6358.

$$Cv = \frac{Q}{114.5\sqrt{\frac{\Delta P\,(P_2 + P_a)}{T_1}}} \quad \cdots\cdots (7)$$

ΔP : Pressure drop between the static pressure tapping ports [bar]
P_1 : Pressure of the upstream tapping port [bar gauge]
P_2 : Pressure of the downstream tapping port [bar gauge]: $P_2 = P_1 - \Delta P$
Q : Flow rate [L/s standard condition]
P_a : Atmospheric pressure [bar absolute]
T_1 : Upstream absolute temperature [K]
Test conditions are < $P_1 + P_a = 6.5 \pm 0.2$ bar absolute, $T_1 = 297 \pm 5$K, 0.07 bar $\leq \Delta P$ 0.14 bar.
This is the same concept as effective area ***A*** which ISO 6358 stipulates as being applicable only when the pressure drop is smaller than the upstream pressure and the compression of air does not become a problem.

3. Process fluid control equipment

(1) Conformed standard

IEC60534-1: 2005: Industrial-process control valves. Part 1: control valve terminology and general considerations
IEC60534-2-3: 1997: Industrial-process control valves. Part 2: Flow capacity, Section Three-Test procedures
JIS B 2005-1: 2012: Industrial-process control valves – Part 1: Control valve terminology and general considerations
JIS B 2005-2-3: 2004: Industrial-process control valves – Part 2: Flow capacity – Section 3: Test procedures
Equipment standards: JIS B 8471: Solenoid valve for water
JIS B 8472: Solenoid valve for steam
JIS B 8473: Solenoid valve for fuel oil

(2) Definition of flow rate characteristics

Kv factor: Value of the clean water flow rate represented by m³/h that runs through the valve (equipment for test) at 5 to 40°C, when the pressure difference is 1 x 105 Pa (1 bar). It is calculated using the following formula:

$$Kv = Q\sqrt{\frac{1 \times 10^5}{\Delta P} \cdot \frac{\rho}{1000}} \quad \cdots\cdots (8)$$

Kv : Flow coefficient [m³/h]
Q : Flow rate [m³/h]
ΔP : Pressure difference [Pa]
ρ : Density of fluid [kg/m³]

(3) Formula of flow rate

It is described by the practical units. Also, the flow rate characteristics are shown in Graph (2).
In the case of liquid:

$$Q = 53Kv\sqrt{\frac{\Delta P}{G}} \quad \cdots\cdots (9)$$

Q : Flow rate [L/min]
Kv : Flow coefficient [m³/h]
ΔP : Pressure difference [MPa]
G : Relative density [water = 1]
In the case of saturated aqueous vapor:

$$Q = 232Kv\sqrt{\Delta P(P_2 + 0.1)} \quad \cdots\cdots (10)$$

Q : Flow rate [kg/h]
Kv : Flow coefficient [m³/h]
ΔP : Pressure difference [MPa]
P_1 : Upstream pressure [MPa]: $\Delta P = P_1 - P_2$
P_2 : Downstream pressure [MPa]

Conversion of flow coefficient:

$Kv = 0.865\ Cv$ ·····(11)

Here,

Cv factor: Value of the clean water flow rate represented by US gal/min that runs through the valve at 40 to 100°F, when the pressure difference is 1 lbf/in^2 (psi)

Value is different from ***Kv*** and ***Cv*** factors for pneumatic purpose due to different test method.

(4) Test method

Connect the equipment for the test to the test circuit shown in Fig. (3), and run water at 5 to 40°C. Then, measure the flow rate with a pressure difference where vaporization does not occur in a turbulent flow (pressure difference of 0.035 MPa to 0.075 MPa when the inlet pressure is within 0.15 MPa to 0.6 MPa). However, as the turbulent flow is definitely caused, the pressure difference needs to be set with a large enough difference so that the Reynolds number does not fall below 1 x 105, and the inlet pressure needs to be set slightly higher to prevent vaporization of the liquid. Substitute the measurement results in formula (8) to calculate ***Kv***.

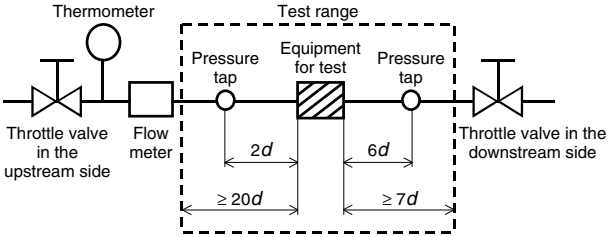

Fig. (3) Test circuit based on IEC60534-2-3, JIS B 2005-2-3

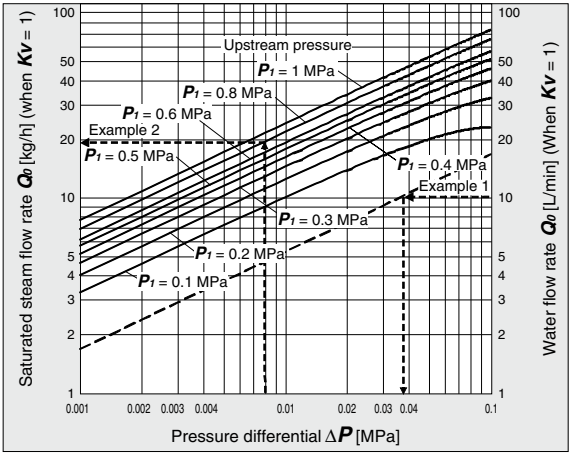

Graph (2) Flow rate characteristics

Example 1)

Obtain the pressure difference when water [15 L/min] runs through the solenoid valve with a ***Kv*** = 1.5 m^3/h.
As the flow rate when ***Kv*** = 1 is calculated as the formula: Q_0 = 15 x 1/1.5 = 10 [L/min], read off ΔP when Q_0 is 10 [L/min] in Graph (2). The reading is 0.036 [MPa].

Example 2)

Obtain the saturated steam flow rate when P_1 = 0.8 [MPa] and ΔP = 0.008 [MPa] with a solenoid valve with a ***Kv*** = 0.05 [m^3/h]. Read off Q_0 when P_1 is 0.8 and ΔP is 0.008 in Graph (2), the reading is 20 kg/h. Therefore, the flow rate is calculated as the formula: Q = 0.05/1 x 20 = 1 [kg/h].

Flow Rate Characteristics

Note) Use this graph as a guide. In the case of obtaining an accurate flow rate, refer to pages 157 through to 161.

For Air (Orifice diameter: ø10 mm, ø15 mm, ø20 mm, ø25 mm)

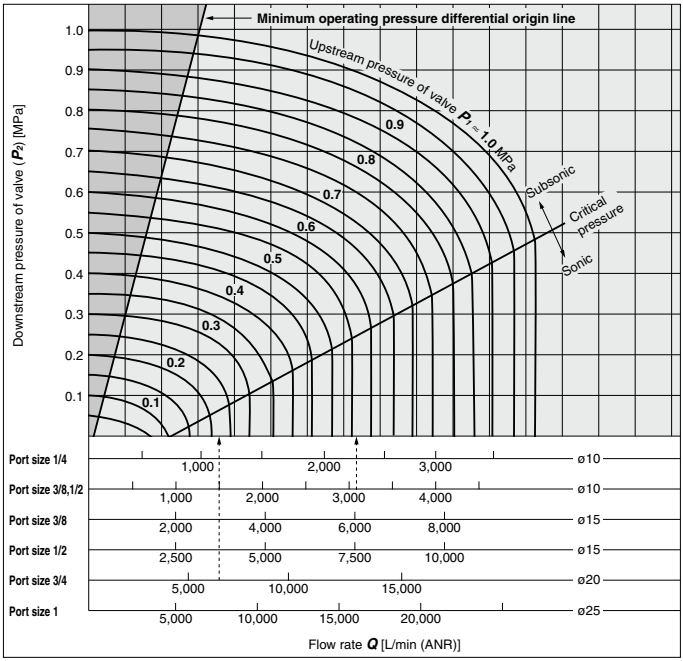

For Air (Orifice diameter: ø35 mm, ø40 mm, ø50 mm)

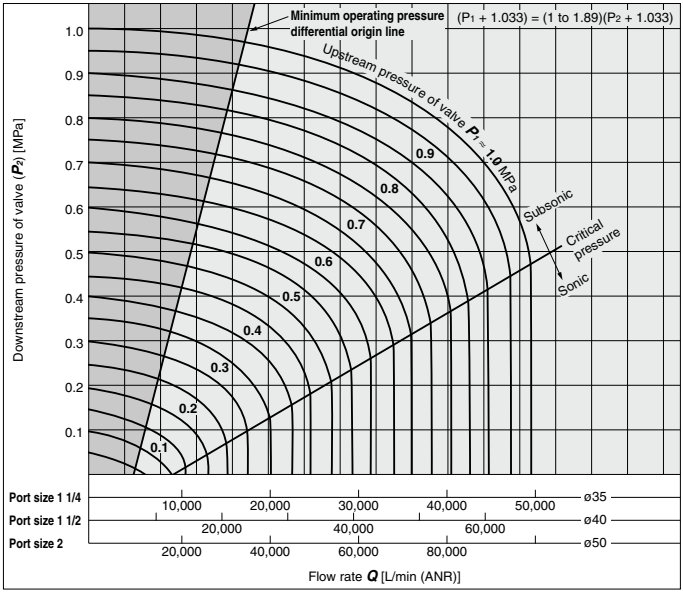

How to read the graph

The sonic range pressure to generate a flow rate of 6000 L/min (ANR) is as follows.
For a ø15 orifice (VXD240□□/Port size 3/8),
$P_1 \approx 0.57$ MPa,
for a ø20 orifice (VXD250□□/Port size 3/4),
$P_1 \approx 0.22$ MPa

⚠Warning

In the area located left to the minimum operating pressure differential origin line in the flow rate characteristics table, the minimum operating pressure is not generated. Do not use the product in this area as this may cause operation failure (valve opening failure, valve closing failure) or damage of the valve. Select valves with suitable size.

For Water

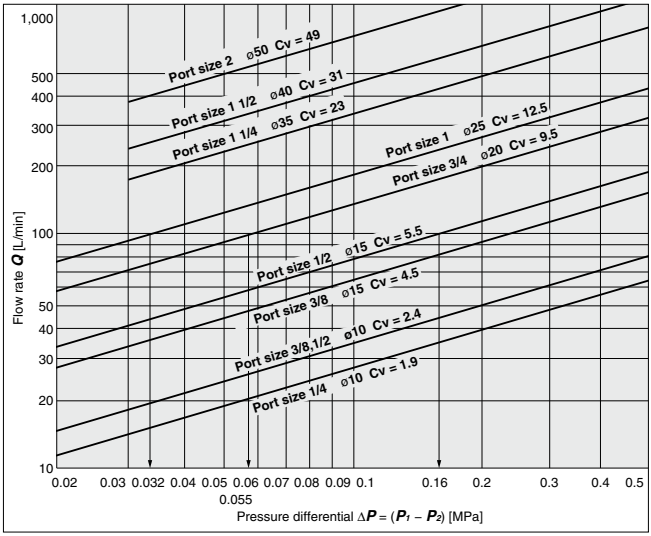

How to read the graph

The pressure differential to generate a flow rate of 100 L/min water is as follows.
For a ø15 orifice (VXD242/Port size 1/2),
$\Delta P \approx 0.16$ MPa,
for a ø20 orifice (VXD252),
$\Delta P \approx 0.055$ MPa,
for a ø25 orifice (VXD262),
$\Delta P \approx 0.032$ MPa

VXD Series
Specific Product Precautions 1

Be sure to read this before handling the products.
Refer to back page 50 for Safety Instructions and pages 17 to 19 for 2 Port Solenoid Valve for Fluid Control Precautions.

Design

⚠Design

1. Cannot be used as an emergency shutoff valve etc.
The valves presented in this catalog are not designed for safety applications such as an emergency shutoff valve. If the valves are used in this type of system, other reliable safety assurance measures should also be adopted.

2. Extended periods of continuous energization
The solenoid coil will generate heat when continuously energized. Avoid using in a tightly shut container. Install it in a well-ventilated area. Furthermore, do not touch it while it is being energized or right after it is energized.

3. Closed liquid circuit
In a closed circuit, when liquid is static, pressure could rise due to changes in temperature. This pressure rise could cause malfunction and damage to components such as valves. To prevent this, install a relief valve in the system.

4. Actuator drive
When an actuator, such as a cylinder, is to be driven using a valve, take appropriate measures to prevent potential danger caused by actuator operation.

5. Pressure (including vacuum) holding
It is not usable for an application such as holding the pressure (including vacuum) inside of a pressure vessel because air leakage is entailed in a valve.

6. When the conduit type is used as equivalent to an IP65 enclosure, install a wiring conduit etc.

7. When an impact, such as water hammer etc., caused by the rapid pressure fluctuation is applied, the solenoid valve may be damaged. Give an attention to it.

Selection

⚠Warning

1. Minimum operating pressure differential

Be aware that even if the pressure difference is above the minimum operating pressure differential when the valve is closed, the pressure difference may fall below the minimum operating pressure differential when the valve opens, depending on the capacity of the supply source (pumps, compressors, etc.,) or the type of pipe restrictions (the piping is bent continuously due to elbow or tee, or narrow tube nozzle is installed in the end). If the product is used below the minimum operating pressure, the operation becomes unstable, which might cause valve opening or closing failure, or oscillation, leading to failure due to insufficient pressure differential. Select an appropriate valve size with reference to the flow rate characteristics and flow rate characteristics table (on pages 157 through to 163).

Selection

⚠Warning

2. Fluid

1) Type of fluid
Select an appropriate valve with reference to the table below for the general fluid. Before using a fluid, check whether it is compatible with the materials of each model by referring to the fluids listed in this catalog. Use a fluid with a kinematic viscosity of 50 mm^2/s or less.
If there is something you do not know, please contact SMC.

Applicable fluid

For Air	Air
For Water	Air/Water
For Oil	Air/Water/Oil
For Heated water	Air(up to 99°C)/Water/Heated water
For High temperature oil	Air(up to 99°C)/Water/High temperature oil

2) Flammable oil, Gas
Do not use the product with combustion-supporting or flammable fluids.

3) Corrosive gas
Cannot be used since it will lead to cracks by stress corrosion or result in other incidents.

4) Depending on water quality, a brass body can cause corrosion and internal leakage may occur. If such abnormalities occur, exchange the product for a stainless steel body.

5) Use an oil-free specification when any oily particle must not enter the passage.

6) Applicable fluid on the list may not be used depending on the operating condition. Give adequate confirmation, and then determine a model, just because the compatibility list shows the general case.

3. Fluid quality

<Air>

1) Use clean air.
Do not use compressed air that contains chemicals, synthetic oils including organic solvents, salt or corrosive gases, etc., as it can cause damage or malfunction.

2) Install an air filter.
Install an air filter close to the valve on the upstream side. A filtration degree of 5 μm or less should be selected.

3) Install an aftercooler or air dryer, etc.
Compressed air that contains excessive drainage may cause malfunction of valves and other pneumatic equipment. To prevent this, install an aftercooler or air dryer, etc.

4) If excessive carbon powder is generated, eliminate it by installing a mist separator on the upstream side of valves.
If excessive carbon powder is generated by the compressor, it may adhere to the inside of the valves and cause a malfunction.

Refer to Best Pneumatics No.5 for further details on compressed air quality.

VXD Series
Specific Product Precautions 2

Be sure to read this before handling the products.
Refer to back page 50 for Safety Instructions and pages 17 to 19 for 2 Port Solenoid Valve for Fluid Control Precautions.

Selection

⚠Warning

<Water>

The use of a fluid that contains foreign objects can cause problems such as malfunction and seal failure by promoting wear of the valve seat and armature, and by sticking to the sliding parts of the armature etc. Install a suitable filter (strainer) immediately upstream from the valve. As a general rule, use 80 to 100 mesh.

The supply water includes materials that create a hard sediment or sludge such as calcium and magnesium. Sediment and sludge can cause the valve to not operate properly. Therefore, install a water softening device, which removes these materials, and a filter (strainer) directly in front of the valve.

<Oil>

Generally, FKM is used as seal material, as it is resistant to oil. The resistance of the seal material may deteriorate depending on the type of oil, manufacturer or additives. Check the resistance before using.

4. Ambient environment

Use within the operable ambient temperature range. Check the compatibility between the product's composition materials and the ambient atmosphere. Be certain that the fluid used does not touch the external surface of the product.

5. Countermeasures against static electricity

Take measures to prevent static electricity since some fluids can cause static electricity.

6. Low temperature operation

1) The valve can be used in an ambient temperature of between –10 to –20°C. However, take measures to prevent freezing or solidification of impurities, etc.
2) When using valves for water application in cold climates, take appropriate countermeasures to prevent the water from freezing in tubing after cutting the water supply from the pump, by draining the water, etc. When warming by a heater, etc., be careful not to expose the coil portion to a heater. Installation of a dryer, heat retaining of the body is recommended to prevent a freezing condition in which the dew point temperature is high and the ambient temperature is low, and the high flow runs.

⚠Caution

1. Leakage voltage

When the solenoid valve is operated using the controller, etc., the leakage voltage should be the product allowable leakage voltage or less. Particularly when using a resistor in parallel with a switching element and using a C-R element (surge voltage suppressor) to protect the switching element, take note that leakage current will flow through the resistor, C-R element, etc., creating a possible danger that the valve may not turn off.

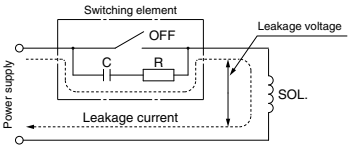

AC coil: 5% or less of rated voltage
DC coil: 2% or less of rated voltage

Selection

⚠Caution

2. Selecting model

Material depends on fluid. Select optimal models for the fluid.

3. When the fluid is oil.

The kinematic viscosity must not exceed 50 mm^2/s.

Mounting

⚠Warning

1. If air leakage increases or equipment does not operate properly, stop operation.

After mounting is completed, confirm that it has been done correctly by performing a suitable function test.

2. Do not apply external force to the coil section.

When tightening is performed, apply a wrench or other tool to the outside of the piping connection parts.

3. Mount a valve with its coil position upward, not downward.

When mounting a valve with its coil positioned downward, foreign objects in the fluid will adhere to the iron core leading to a malfunction. Especially for strict leakage control, such as with vacuum applications and non-leak specifications, the coil must be positioned upward.

4. Do not warm the coil assembly with a heat insulator etc.

Use tape, heaters, etc., for freeze prevention on the piping and body only. They can cause the coil to burn out.

5. Secure with brackets, except in the case of steel piping and copper fittings.

6. Avoid sources of vibration, or adjust the arm from the body to the minimum length so that resonance will not occur.

7. Painting and coating

Warnings or specifications printed or labeled on the product should not be erased, removed or covered up.

VXD Series
Specific Product Precautions 3

Be sure to read this before handling the products.
Refer to back page 50 for Safety Instructions and pages 17 to 19 for 2 Port Solenoid Valve for Fluid Control Precautions.

Disassembly/Assembly Procedures

⚠Caution

1. Before disassembling, be sure to shut off the power supply and pressure supply, and then release the residual pressure.

Disassembly

<N.C.>

1) Loosen the mounting screws.
   The coil assembly, stopper, return spring, armature assembly and body can be removed.

<N.O.>

1) Loosen the mounting screws.
   The coil assembly, push rod assembly, O-rings, adapter and body can be removed.

Assembly

<Common to N.C. and N.O.>

1) Mount the components on the body in the reverse order of disassembly.
2) Push the coil assembly against the body and tighten the screws two or more rounds diagonally (Fig. 2) in the status that there are no gaps between the coil assembly and body (Fig. 1).
   Tighten the screws in the order of "1→2→3→4→1→2→3→4".

Proper Tightening Torque N·m

VXD2$^{3}_{A}$	0.5
VXD2$^{4}_{B}$	
VXD2$^{5}_{C}$	
VXD2$^{6}_{D}$	0.7
VXD2$^{7}_{E}$	
VXD2$^{8}_{F}$	
VXD2$^{9}_{G}$	

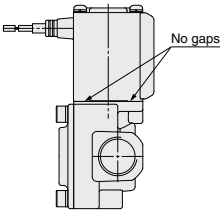

Fig. 1

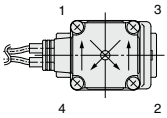

Fig. 2

∗ After tightening the screws, make sure that there are no gaps between the coil and body (Fig. 1).
∗ After the disassembly and assembly have been completed, make sure that no leak occurs from the seal. Additionally, when restarting the valve, make sure that the valve operates correctly after checking the safety.

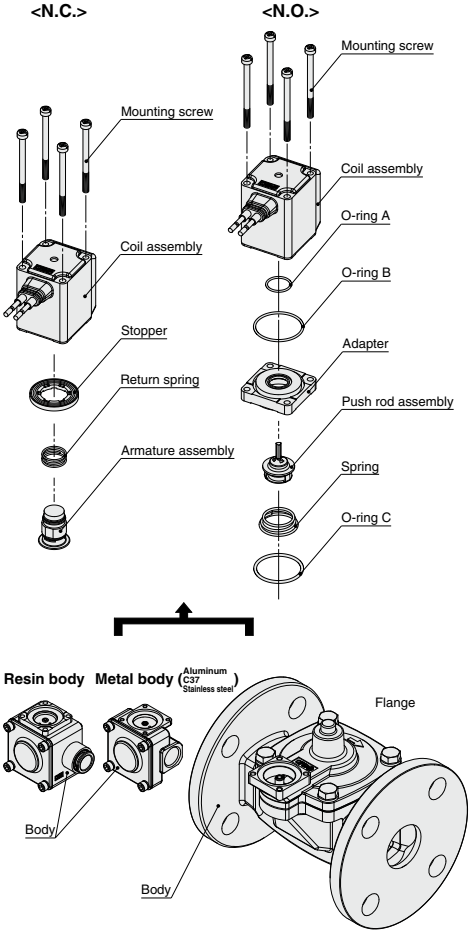

VXD Series
Specific Product Precautions 4

Be sure to read this before handling the products.
Refer to back page 50 for Safety Instructions and pages 17 to 19 for 2 Port Solenoid Valve for Fluid Control Precautions.

Piping

⚠Warning

1. **During use, deterioration of the tube or damage to the fittings could cause tubes to come loose from their fittings and thrash about.**
   To prevent uncontrolled tube movement, install protective covers or fasten tubes securely in place.
2. **For piping the tube, fix the product securely using the mounting holes so that the product is not in the air.**

⚠Caution

1. **Preparation before piping**
   Before piping is connected, it should be thoroughly blown out with air (flushing) or washed to remove chips, cutting oil and other debris from inside the pipe.
   Install piping so that it does not apply pulling, pressing, bending or other forces on the valve body.
2. **Avoid connecting ground lines to piping, as this may cause electric corrosion of the system.**
3. **Always tighten threads with the proper tightening torque.**
   When attaching fittings to valves, tighten with the proper tightening torque shown below.

   Tightening Torque for Piping

Connection thread	Proper tightening torque (N·m)
Rc1/8	7 to 9
Rc1/4	12 to 14
Rc3/8	22 to 24
Rc1/2	28 to 30
Rc3/4	
Rc1	36 to 38

4. **When connecting piping to a product**
   Avoid mistakes regarding the supply port etc.
5. **If the regulator and solenoid valve are connected directly, chattering may occur as both of them generate vibration. Do not connect them.**
6. **If the effective area of piping on the fluid supply side is restricted, the operation may become unstable due to differential pressure fluctuation during valve operation. The piping on the fluid supply side should match the port size of the valve.**

Recommended Piping Conditions

1. **When connecting tubes using One-touch fittings, provide some spare tube length shown in Fig. 1, recommended piping configuration.**
   Also, do not apply external force to the fittings when binding tubes with bands etc. (see Fig. 2.)

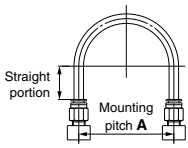

Fig. 1 Recommended piping configuration

Recommended Piping Conditions

Unit: mm

Tube size	Mounting pitch **A**			Straight portion length
	Nylon tube	Soft nylon tube	Polyurethane tube	
ø1/8"	44 or more	35 or more	25 or more	16 or more
ø6	84 or more	66 or more	39 or more	30 or more
ø1/4"	89 or more	70 or more	57 or more	32 or more
ø8	112 or more	88 or more	52 or more	40 or more
ø10	140 or more	110 or more	69 or more	50 or more
ø12	168 or more	132 or more	88 or more	60 or more

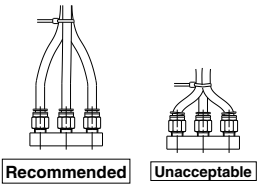

Fig. 2 Binding tubes with bands

Wiring

⚠Warning

1. **The solenoid valve is an electrical product. For safety, install an appropriate fuse and circuit breaker before use.**
   When using multiple solenoid valves, it is not sufficient to merely install one fuse on the inlet side. In order to ensure the safety of the devices, select and install a fuse for each circuit.
2. **Do not apply AC voltage to Class "H" coil AC type unless it is built in full-wave rectifier, or the coil will be damaged.**

⚠Caution

1. **As a rule, use electrical wire with a cross sectional area of 0.5 to 1.25 mm² for wiring.**
   Furthermore, do not allow excessive force to be applied to the lines.
2. **Use electrical circuits which do not generate chattering in their contacts.**
3. **Use voltage which is within ±10% of the rated voltage. In cases with a DC power supply where importance is placed on responsiveness, stay within ±5% of the rated value. The voltage drop is the value in the lead wire section connecting the coil.**
4. **When a surge from the solenoid affects the electrical circuitry, install a surge voltage suppressor etc., in parallel with the solenoid. Or, adopt an option that comes with the surge voltage protection circuit. (However, a surge voltage occurs even if the surge voltage protection circuit is used. For details, please consult with SMC.)**

VXD Series
Specific Product Precautions 5

Be sure to read this before handling the products.
Refer to back page 50 for Safety Instructions and pages 17 to 19 for 2 Port Solenoid Valve for Fluid Control Precautions.

Operating Environment

⚠Warning

1. **Do not use in an atmosphere having corrosive gases, chemicals, sea water, water, water vapor, or where there is direct contact with any of these.**
2. **Do not use in explosive atmospheres.**
3. **Do not use in locations subject to vibration or impact.**
4. **Do not use in locations where radiated heat will be received from nearby heat sources.**
5. **Employ suitable protective measures in locations where there is contact with water droplets, oil or welding spatter, etc.**

Maintenance

⚠Warning

1. **Removing the product**
   The valve will reach a high temperature when used with high temperature fluids. Confirm that the valve temperature has dropped sufficiently before performing work. If touched inadvertently, there is a danger of being burned.
   1) Shut off the fluid supply and release the fluid pressure in the system.
   2) Shut off the power supply.
   3) Dismount the product.
2. **Low frequency operation**
   Switch valves at least once every 30 days to prevent malfunction. Also, in order to use it under the optimum state, conduct a regular inspection once a half year.

⚠Caution

1. **Filters and strainers**
   1) Be careful regarding clogging of filters and strainers.
   2) Replace filter elements after one year of use, or earlier if the pressure drop reaches 0.1 MPa.
   3) Clean strainers when the pressure drop reaches 0.1 MPa.
2. **Lubrication**
   When using after lubricating, never forget to lubricate continuously.
3. **Storage**
   In case of long term storage after use, thoroughly remove all moisture to prevent rust and deterioration of rubber materials, etc.
4. **Exhaust the drainage from the air filter periodically.**

Operating Precautions

⚠Warning

1. **If there is a possibility of reverse pressure being applied to the valve, take countermeasures such as mounting a check valve on the downstream side of the valve.**
2. **When problems are caused by a water hammer, install water hammer relief equipment (accumulator, etc.), or use an SMC water hammer relief valve (VXR series). For details, please consult with SMC.**
3. **When the pilot type 2 port solenoid valve is closed, and pressure is applied suddenly due to the starting of fluid supply source such as pump and compressor, the valve may open momentarily and fluid may leak.**

Operating Precautions

⚠Warning

4. **If the product is used in the conditions in which rapid decrease in the inlet pressure of the valve and rapid increase in the outlet pressure of the valve are repeated, excessive stress will be applied to the diaphragm, which causes the diaphragm to be damaged and dropped, leading to the operation failure of the valve. Check the operating conditions before use.**

Electrical Connections

⚠Caution

■ **Grommet**
Class B coil: AWG20 Insulator O.D. 2.6 mm
Class H coil: AWG18 Insulator O.D. 2.1 mm

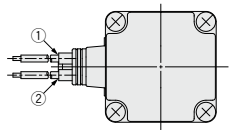

Rated voltage	Lead wire color ①	Lead wire color ②
DC	Black	Red
100 VAC	Blue	Blue
200 VAC	Red	Red
Other AC	Gray	Gray

∗ There is no polarity.

■ **DIN terminal**

Disassembly

1. After loosening the binding head screw with flange, then if the housing is pulled in the direction of the arrow, the connector will be removed from the solenoid valve.
2. Pull out the binding head screw with flange from the housing.
3. There is a cutout on the bottom of the terminal block. Insert a small flat head screwdriver, etc. into this cutout, and remove the terminal block from the housing. (See next page)
4. Remove the ground nut, and pull out the washer and the rubber seal.

Wiring

1. Pass the cable through the ground nut, washer and rubber seal in this order, and insert these parts into the housing.
2. Loosen the binding head screw of the terminal block, then insert the core wire or the crimped terminal of the lead wire into the terminal, and securely fix it with the binding head screw. The binding head screw of the terminal block is M3.
   Note 1) Tighten the screw to a torque of between 0.5 and 0.6 N·m.
   Note 2) Cable O.D.: ø6 to ø12 mm
   Note 3) For an outside cable diameter of ø9 to 12 mm, remove the internal parts of the rubber seal before using.

Assembly

1. Pass the cable through the ground nut, washer, rubber seal and the housing in this order, and connect to the terminal block. Then, set the terminal block inside the housing. (Push in the terminal block until it snaps into position.)
2. Insert the rubber seal and the washer in this order into the cable entry of the housing, and then tighten the ground nut securely.
3. Insert the gasket between the bottom part of the terminal block and the plug attached to the equipment, and then insert the binding head screw with flange from the top of the housing, and tighten it.
   Note 1) Tighten the screw to a torque of between 0.5 and 0.6 N·m.
   Note 2) The orientation of the connector can be changed in steps of 90° by changing the method of assembling the housing and the terminal block.

Specific Product Precautions 6

Be sure to read this before handling the products.
Refer to back page 50 for Safety Instructions and pages 17 to 19 for 2 Port Solenoid Valve for Fluid Control Precautions.

Electrical Connections

⚠Caution

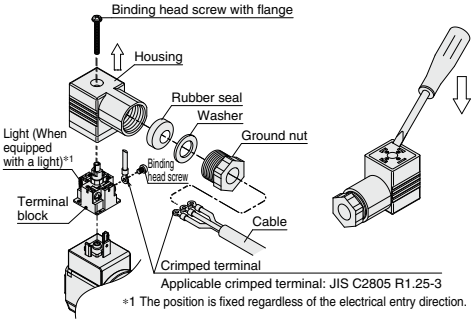

Internal connections are as shown below. Make connections to the power supply accordingly.

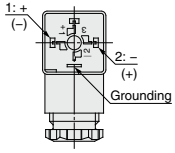

Terminal no.	1	2
DIN terminal	+(–)	–(+)

* There is no polarity.

DIN (EN175301-803) Terminal

This DIN terminal corresponds to the Form A DIN connector with an 18 mm terminal pitch, which complies with EN175301-803B.

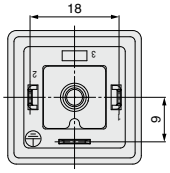

■ Conduit terminal

Disassembly

1. Loosen the mounting screw, and remove the terminal cover from the conduit terminal.

Wiring

1. Insert the cable into the conduit terminal.
2. Loosen the screw with UP terminal of the conduit terminal, then insert the core wire or the crimped terminal of the lead wire into the terminal, and securely fix it with the screw with UP terminal.
   Note 1) Tighten the screw to a torque of between 0.5 and 0.6 N·m.

⚠Caution

Assembly

1. Insert the gasket into the conduit terminal, and then clamp the terminal cover with the mounting screw.
   Note 1) Tighten the screw to a torque of between 0.5 and 0.6 N·m.
   Note 2) When changing the orientation of the conduit terminal, carry out the following procedure.
   1. Apply a tool (monkey wrench, spanner, etc.) to the width across flats of the conduit terminal, and turn the terminal in the counterclockwise direction.
   2. Loosen the lock nut.
   3. Turn the conduit terminal in the clamping direction (clockwise direction) to about 15° ahead of the desired position.
   4. Turn the lock nut by hand to the coil side until it is lightly tightened.
   5. Apply a tool to the width across flats of the conduit terminal, and turn it to the desired position (through an angle of about 15°) so as to clamp the conduit terminal.
   Note) When changing the orientation by applying additional tightening force to the conduit terminal from the factory-set position, turn no more than one half a turn.

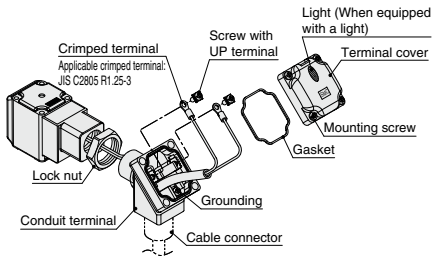

Make connections according to the marks shown below.
- Use the tightening torques below for each section.
- Properly seal the terminal connection (G1/2) with the special wiring conduit etc.

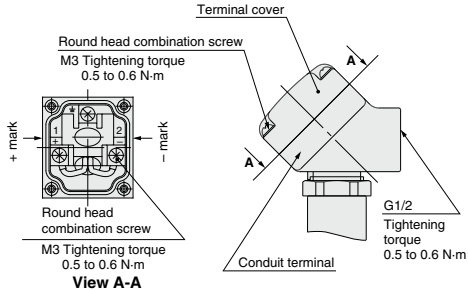

View A-A
(Internal connection diagram)

Specific Product Precautions 7

Be sure to read this before handling the products.
Refer to back page 50 for Safety Instructions and pages 17 to 19 for 2 Port Solenoid Valve for Fluid Control Precautions.

Electrical Connections

⚠ Caution

■ Conduit

When used as an IP65 equivalent, use seal to install the wiring conduit. Also, use the tightening torque below for the conduit.

Class B coil: AWG20 Insulator O.D. 2.5 mm
Class H coil: AWG18 Insulator O.D. 2.1 mm

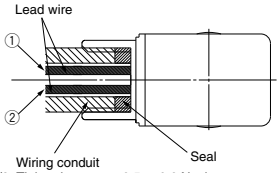

(Connection G1/2 Tightening torque 0.5 to 0.6 N·m)

Rated voltage	Lead wire color	
	①	②
DC	Black	Red
100 VAC	Blue	Blue
200 VAC	Red	Red
Other AC	Gray	Gray

∗ There is no polarity.

Description	Part no.
Seal	VCW20-15-6

Note) Please order separately.

Electrical Circuits

⚠ Caution

[DC circuit]

Grommet, Flat terminal

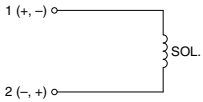

Without electrical option

Grommet, DIN terminal, Conduit terminal, Conduit

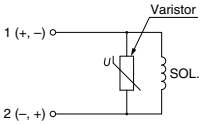

With surge voltage suppressor

DIN terminal, Conduit terminal

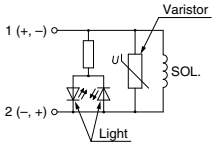

With light/surge voltage suppressor

[AC circuit]

∗ For AC, the standard product is equipped with surge voltage suppressor.

Grommet, DIN terminal, Conduit terminal, Conduit

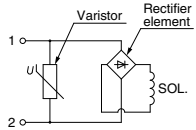

Without electrical option

DIN terminal, Conduit terminal

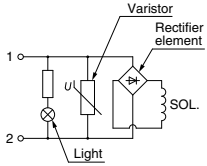

With light/surge voltage suppressor

Note 1) Coil for DIN terminal H type with AC voltage does not have full-wave rectifier. Full-wave rectifier is built in the DIN connector. Refer to page 155 to order it as an accessory.

One-touch Fitting

⚠ Caution

For information on handling One-touch fittings and on appropriate tubing, refer to page 167 and the Fittings & Tubing section of the "Handling Precautions for SMC Products" on the SMC website.