Throttle check valve

Type Z2FS

RE 27526
Edition: 2015-01
Replaces: 04.08

tb0221

- Size 16
- Component series 3X
- Maximum operating pressure 350 bar *[5076 psi]*
- Maximum flow 250 l/min *[66 US gpm]*

Features

- Sandwich plate valve
- Porting pattern according to ISO 7/7/4401-0-05 and NFPA T3.5.1 R2-D05
- Flow limitation of 2 actuator ports
- Adjustment type: Spindle with internal hexagon
- Supply or discharge throttling

Content

Ordering codes

01	02	03	04	05	06		07		08	09	10	11
Z	**2**	**FS**	**16**		**8**	**–**	**3X**	**/**				*****

01	Sandwich plate valve	**Z**

Number of functions

02	2 (throttling in channel A and/or B)	**2**

03	Throttle check valve	**FS**

04	Size 16	**16**

Functions in

05	Channel A	**A**
	Channel B	**B**
	Channel A and B	**–**

Adjustment type

06	Spindle with internal hexagon	**8**

07	Component series 30 ... 39 (30 ... 39: unchanged installation and connection dimensions)	**3X**

Supply throttling/discharge throttling

08	Supply throttling on side A (“...A8–3X/S”) Supply throttling on side B (“...B8–3X/S”) Supply throttling on side A and B (“...–8–3X/S”)	**S**
	Discharge throttling on side A (“...A8–3X/S2”) Discharge throttling on side B (“...B8–3X/S2”) Discharge throttling on side A and B (“...–8–3X/S2”)	**S2**

Corrosion resistance (outside)

09	None (valve housing primed) (standard)	**no code**
	Improved corrosion protection (240 h salt spray test according to EN ISO 9227)	**J3**

Seal material

10	NBR seals	**no code**
	FKM seals	**V**
	Observe compatibility of seals with hydraulic fluid used! (Other seals on request)	

11	Further details in plain text	*****

☞ **Notice:** Preferred types and standard devices are contained in the EPS (standard price list).

Symbols (① = component side, ② = plate side)

Supply throttling "S"

Discharge throttling "S2"

Version "–"

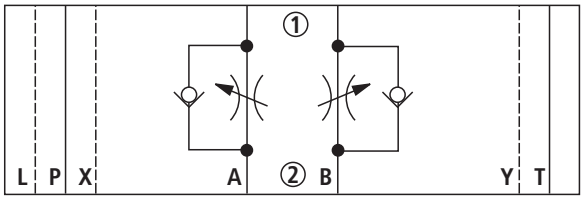

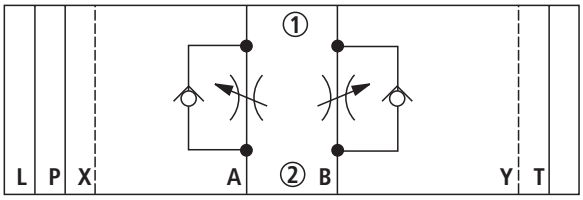

Version "A"

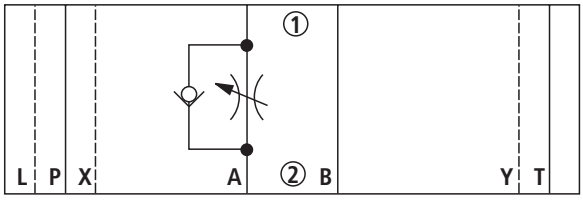

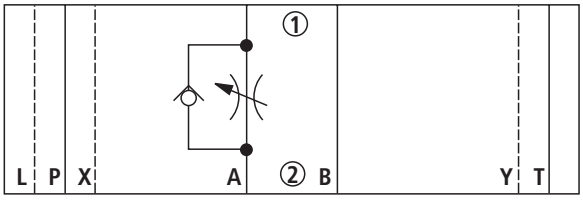

Version "B"

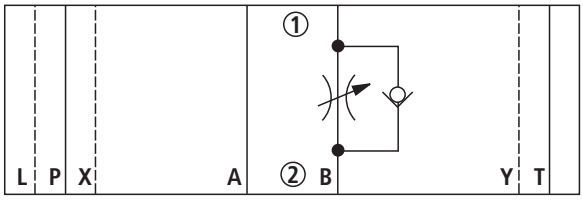

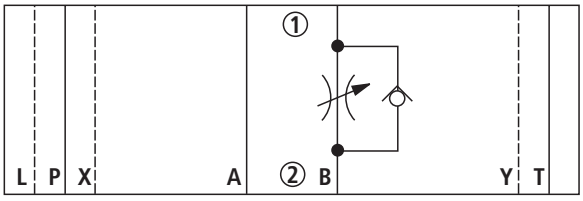

Function, section

The Z2FS-type valve is a throttle check valve in sandwich plate design. It is used to limit the flow of one or two actuator ports.

Two throttle check valves aligned symmetrically to each other limit the flow in one direction (using an adjustable throttle spool) and allow free return flow in the opposite direction.
During supply throttling, the hydraulic fluid arrives at actuator A② via channel A① via the throttling point (1). The throttle spool (2.1) can be adjusted axially via the spindle (3), thus enabling the throttling point to be set (1).

Simultaneously, the hydraulic fluid that is present in channel A① reaches the piston side (5) via the bore (4). In addition to the spring force, the applied pressure holds the throttle spool (2.1) in throttle position.
The hydraulic fluid flowing back from actuator B② displaces throttle spool (2.2), thus enabling unhindered flow as a check valve. Depending on the version (“S” or “S2”), the throttle effect can occur in the supply or in the discharge.

Flow limitation
For changing the speed of an actuator, throttle check valve is installed between the directional valve and the subplate.

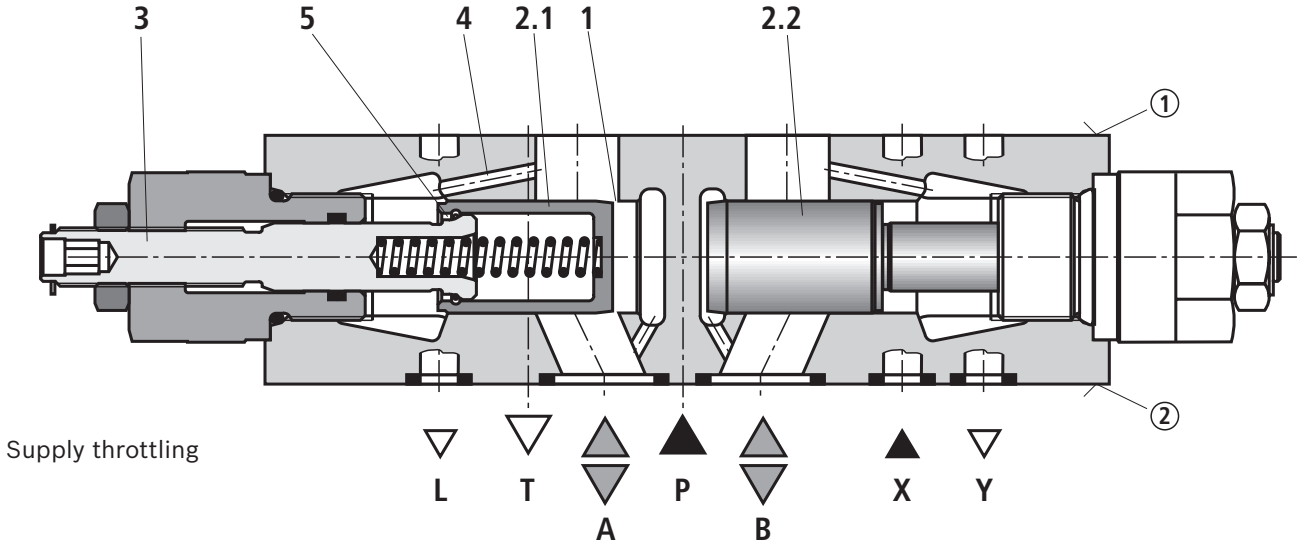

① = component side
② = plate side

Technical data
(For applications outside these values, please consult us!)

General		
Weight	kg *[lbs]*	Approx. 4.7 *[10.4]*
Installation position		Any
Ambient temperature range	°C *[°F]*	–30 ... +80 *[–22 ... +176]* (NBR seals) –20 ... +80 *[-4 ... +176]* (FKM seals)

Hydraulic		
Maximum operating pressure	bar *[psi]*	350 *[5076]*
Maximum flow	l/min *[US gpm]*	250 *[66]*
Hydraulic fluid		See table below
Hydraulic fluid temperature range	°C *[°F]*	–30 ... +80 *[–22 ... +176]* (NBR seals) –20 ... +80 *[-4 ... +176]* (FKM seals)
Viscosity range	mm^2/s *[SUS]*	2,8 ... 380 *[13 ... 1760]*
Maximum permissible degree of contamination of the hydraulic fluid, cleanliness class according to ISO 4406 (c)		Class 20/18/15 [1]

Hydraulic fluid		**Classification**	**Suitable sealing materials**	**Standards**	**Data sheet**
Mineral oils		HL, HLP	NBR, FKM	DIN 51524	90220
Bio-degradable	▶ Insoluble in water	HEES [2]	FKM	ISO 15380	90221
	▶ Soluble in water	HEPG [2]	FKM	ISO 15380	
Flame-resistant	▶ Containing water	HFC (Fuchs Hydrotherm 46M, Petrofer Ultra Safe 620) [2]	NBR	ISO 12922	on request

☞ **Important information on hydraulic fluids:**
- ▶ For more information and data about the use of other hydraulic fluids, refer to data sheets above or contact us!
- ▶ There may be limitations regarding the technical valve data (temperature, pressure range, life cycle, maintenance intervals, etc.)!
- ▶ The flash point of the hydraulic fluid used must be 40 K higher than the maximum solenoid surface temperature.
- ▶ **Flame-resistant – containing water**:
  - Maximum pressure differential 210 bar, otherwise, increased cavitation
  - Pressure pre-loading at the tank port > 20% of the pressure differential, otherwise increased cavitation
  - Life cycle as compared to operation with mineral oil HL, HLP 30 to 100%

[1] The cleanliness classes stated for the components need to be maintained in hydraulic systems. Effective filtration prevents faults and at the same time increases the life cycle of the components.
For the selection of the filters see www.boschrexroth.com/filter.

[2] Not for version “J3”

Characteristic curves
(measured with HLP46, ϑ_{Oil} = 40 ± 5 °C *[104 ±9 °F]*)

Δ*p*-*q*$_V$ characteristic curves (via check valve, with throttle closed)

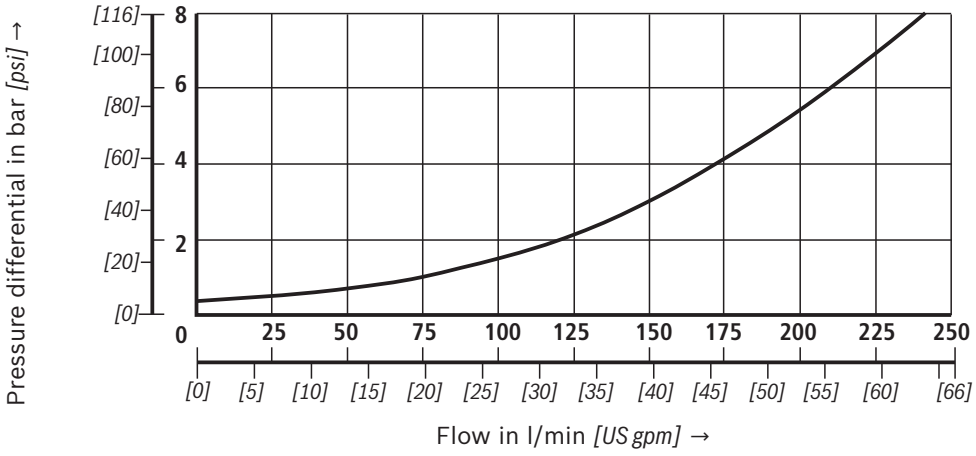

Δ*p*-*q*$_V$ characteristic curves (throttle position constant)

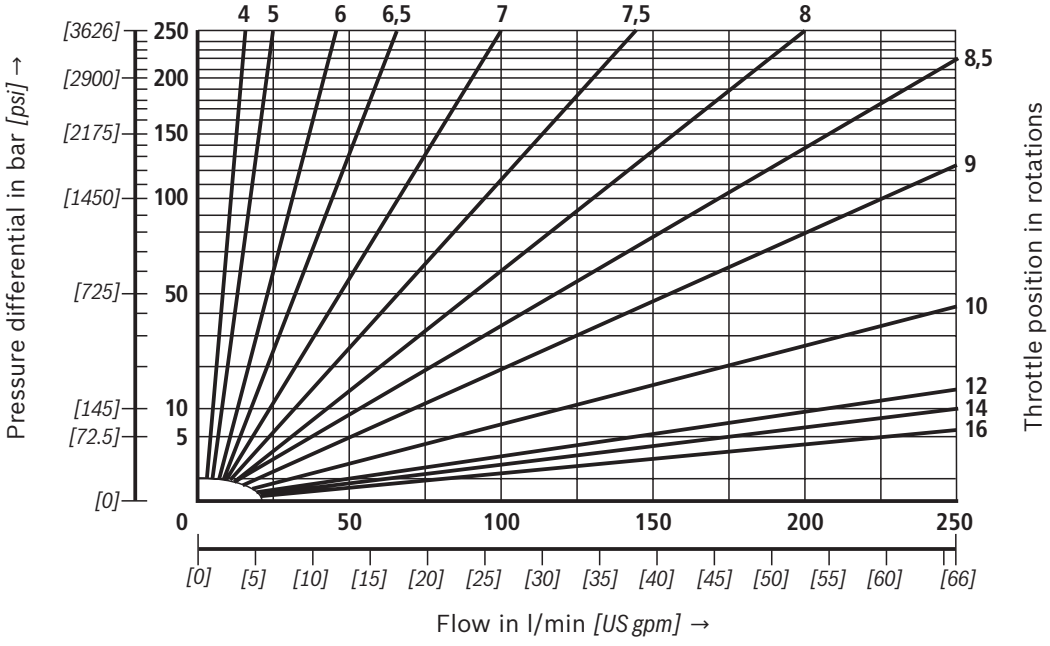

Dimensions
(in mm *[inch]*)

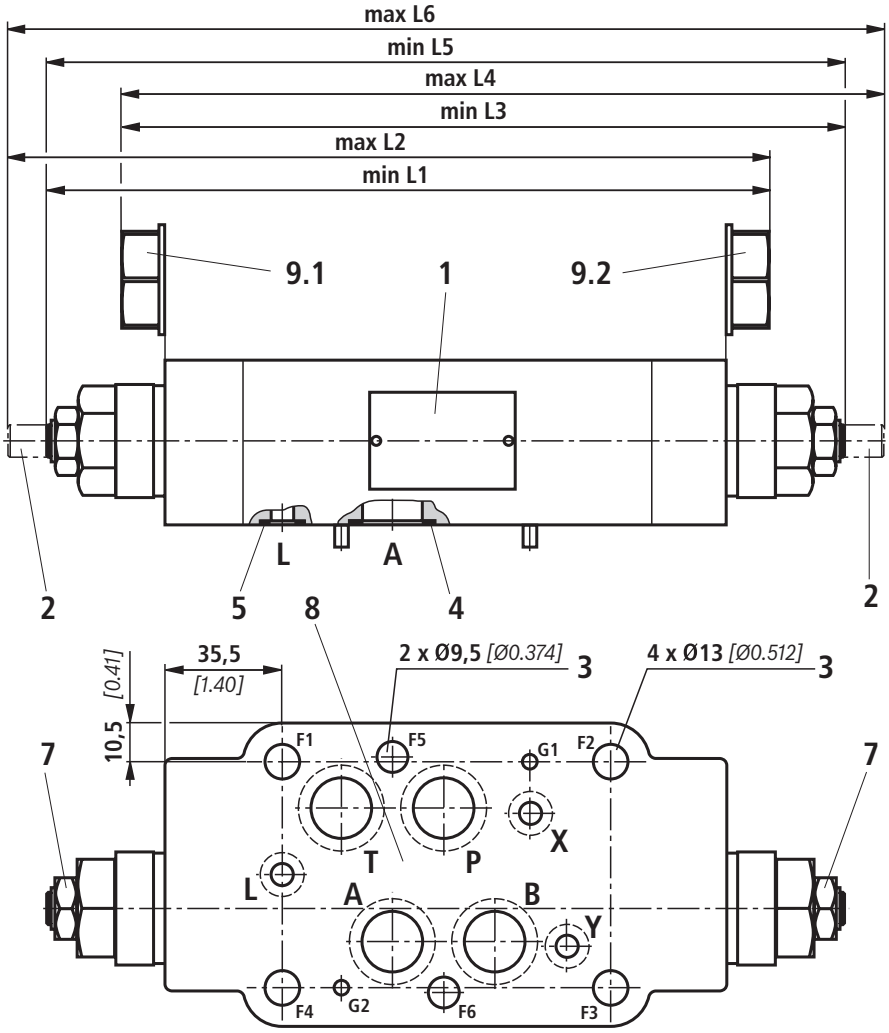

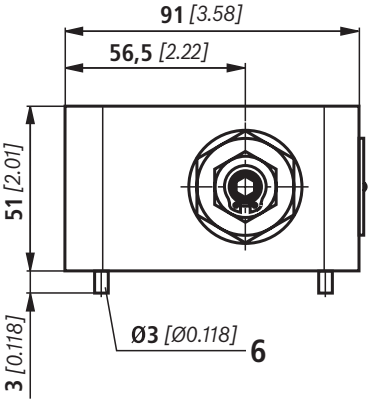

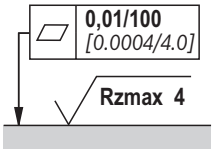

Required surface quality of the valve contact surface

"Corrosion resistance" version	L1	L2	L3	L4	L5	L6	Pos. 7 M_A in Nm *[ft-lbs]* ±10 %
"no code"	224 *[8.82]*	248 *[9.76]*	224 *[8.82]*	248 *[9.76]*	246 *[9.68]*	294 *[11.57]*	25 *[18.4]*
"J3"	227 *[8.94]*	251 *[9.88]*	227 *[8.94]*	251 *[9.88]*	252 *[9.92]*	300 *[11.81]*	33 *[24.3]*

1 Name plate

2 Adjustment type "8"
Spindle for changing the flow cross-section (internal hexagon SW6)
- Anti-clockwise rotation = higher flow
- Clockwise rotation = smaller flow

3 Through holes for valve mounting

4 Identical seal rings for ports A, B, P, T

5 Identical seal rings for ports X, Y, L

6 Locking pin (not included in the scope of delivery)

7 Hexagon SW19, tightening torque M_A see table above

8 Porting pattern according to ISO 7/7/4401-0-05 and NFPA T3.5.1 R2-D05

9.1 Plug screw for version "B"

9.2 Plug screw for version "A"

Valve mounting screws (separate order)

- metric
  4 hexagon socket head cap screws ISO 4762 - M10 - 10.9-flZn-240h-L
  2 hexagon socket head cap screws ISO 4762 - M6 - 10.9-flZn-240h-L

- UNC
  4 hexagon socket head cap screws 3/8-16 UNC
  2 hexagon socket head cap screw 1/4-20 UNC

☞ **Notice:**
Length and tightening torque of the valve mounting screws must be calculated according to the components mounted under and over the sandwich plate valve.

Further information

▶ Mineral oil-based hydraulic fluids	Data sheet 90220
▶ Environmentally compatible hydraulic fluids	Data sheet 90221
▶ Hydraulic valves for industrial applications	Data sheet 07600-B
▶ General product information on hydraulic products	Data sheet 07008
▶ Assembly, commissioning and maintenance of industrial valves	Data sheet 07300
▶ Filter range	www.boschrexroth.com/filter

Bosch Rexroth AG
Hydraulics
Zum Eisengiesser 1
97816 Lohr am Main, Germany
Phone +49 (0) 93 52 / 18-0
documentation@boschrexroth.de
www.boschrexroth.de